# DarkStar®



# Systems Guide

v5.2.0

We Make DWDM Easy

# Notices

Please note the following before using DarkStar equipment.

## Trademark

DarkStar® is a registered trademark of XKL®, LLC.

## Copyright

Copyright ©2006-2026 XKL, LLC

This document contains information that is protected by copyright. All rights are reserved. Reproduction, adaptation, or translation without prior written permission is prohibited, except as allowed under the copyright laws.

All material contained herein is proprietary to XKL, LLC.

## Warranty

The information in this publication is subject to change without notice. The information contained herein should not be construed as a commitment by XKL, LLC.

XKL, LLC shall not be liable for errors contained herein or for incidental or consequential damages in connection with the furnishing, performance, or use of this material.

## U.S. Government Restricted Rights

The Computer Software is delivered as "Commercial Computer Software" as defined in DFARS 48 CFR 252.227-7014.

All Computer Software and Computer Software Documentation acquired by or for the U.S. Government is provided with Restricted Rights. Use, duplication or disclosure by the U.S. Government is subject to the restrictions described in FAR 48 CFR 52.227-14 or DFARS 48 CFR 252.227-7014, as applicable.

Technical Data acquired by or for the U.S. Government, if any, is provided with Limited Rights.

Use, duplication or disclosure by the U.S. Government is subject to the restrictions described in FAR 48 CFR 52.227-14 or DFARS 48 CFR 252.227-7013, as applicable.

## Class A Compliance

DarkStar equipment has been tested and found to comply with the limits for a Class A digital device, pursuant to part 15 of the FCC Rules. These limits are designed to provide reasonable protection against harmful interference when the equipment is operated in a commercial environment. This equipment generates, uses, and can radiate radio frequency energy and, if not operated in accordance with the instruction manual, may cause harmful interference to radio communications.

Operation of this equipment in a residential area may cause harmful interference, in which case the user will be required to correct the interference at his own expense.

## Laser Safety

DarkStar products use hazard level 1M laser radiation, which presents a danger to human health.

Do not stare into the lasers or view with non-attenuating optical instruments. Doing so may lead to severe eye damage.

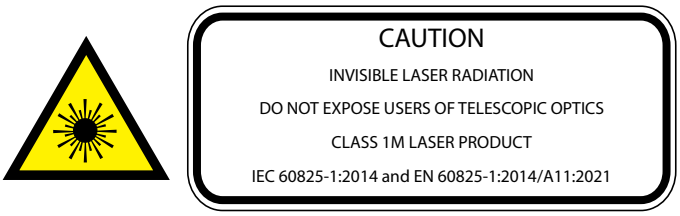


Caution—use of controls or adjustments or performance of procedures other than those specified herein may result in hazardous radiation exposure.

## Software Copyright

The software copyright notices are contained in the file located at /CopyrightAndNotices.txt on your DarkStar system.

## Instruction Details

Equipment is intended for installation in Restricted Access Area. (Les matériels sont destinés à être installés dans des EMPLACEMENTS À ACCÉS RESTREINT.)

The building installation wiring shall include a suitable disconnect device that provides a means to safely remove power from the equipment.

# Table of Contents

**Notices** ..... i

1 **Introduction** ..... 1

**DarkStar Product Overview** ..... 1
Comparing Transceivers Used in DarkStar Systems ..... 2
**Hardware** ..... 3
DarkStar Muxponders and Transponders ..... 3
DarkStar Mux/Demux - DMD ..... 9
DarkStar Amplification ..... 10
DarkStar SpectraPath ..... 13
DarkStar MediaLight ..... 14
**Network Design** ..... 17
**Network Topology Examples** ..... 19
**Key Benefits** ..... 28

2 **Components** ..... 30

**Power Supply Modules** ..... 30
**Fan Modules** ..... 30
**Optical Components** ..... 31
**Operating System DXMOS** ..... 32
DXMOS Modes ..... 32
Terminal Pager ..... 33
Syntax Format ..... 33
Abbreviations and Shortcuts ..... 34
**Command Line Help** ..... 35

3 **Rack-Mounting the System** ..... 37

**Before you begin** ..... 37
**Installing a DarkStar System in a 4-Post Rack (19 in.)** ..... 37
**Four-Post Racking Instructions Overview** ..... 37
Four-Post Rack Installation Steps ..... 38

**Installing a DarkStar System in a 2-Post Rack ..... 42**
**Two-Post Racking Instructions Overview ..... 42**
Two-Post Rack Installation Steps ..... 44
**2U Front Mounting Kit Instructions ..... 47**

**4 Setup and Management Configuration ..... 48**

**Connect the Console Terminal ..... 48**
**Connect Power ..... 49**
System Boot ..... 51
Boot and Recovery ..... 51
**Factory Settings ..... 54**
System Factory Settings ..... 54
**Configuring the System ..... 59**
Saving Your Configurations ..... 60
Specify a Host Name ..... 61
Set the System Clock ..... 62
Configure a Static Host ..... 63
Specify a DNS Server and Domain Name ..... 63
Configure Security and AAA Authentication ..... 64
Specify a Management IP Loopback Address ..... 76
Configure Management Ethernet/OSC ..... 77
Configure BERT Logging ..... 80
Configure SNMP Traps and Monitoring ..... 80
Set up Remote Event Logging ..... 81
Verify Your Connections ..... 83
**Remote File Configuration ..... 83**
Boot Remote File Configuration ..... 83
DXMOS Remote File Configuration ..... 85

**5 Monitoring & System Maintenance ..... 87**

**Monitoring the DarkStar System ..... 87**
System Monitoring ..... 87
Front Panel LEDs ..... 88
Amplifier Alarms ..... 93
System "show" Commands ..... 94
Error Detection ..... 109
SNMP Traps ..... 109
idle-mute ..... 110
BERT Logging ..... 110
**System Maintenance and Updates ..... 114**
Hot Swap a Power Supply Module ..... 114
Hot Swap a Fan Module ..... 115

Line Transceiver Replacement ..... 116
Hitless Software Update and Reboot ..... 118

6 Connecting a DarkStar System ..... 119

**Overview** ..... 119
**Muxponders** ..... 121
DQM10 ..... 121
DQM100 ..... 125
DSM10-10 ..... 131
DQM400-4 ..... 135
DFM400-12 ..... 139
**Transponders** ..... 144
DQT10 ..... 144
DQT100 ..... 150
DAT100-8 ..... 157
DQT400-4 ..... 164
DQT400-12 ..... 168
DFX400-12 ..... 174
**Mux/Demux with Amplifier System (DMD-A)** ..... 179
DMD-A ..... 179
**Inline Amplifiers** ..... 187
DLA ..... 187
**Utility Amplifiers** ..... 196
DUA ..... 196
**SpectraPath** ..... 207
Provisioner ..... 207
Illuminator ..... 219
Custom Waveplan Configuration ..... 229
**Managing Amplifiers** ..... 230
Verify Amplifier Status ..... 230
Verify EDFA Settings ..... 231
Amplifier Configuration ..... 234
**Redundancy (APP)** ..... 239
**Setting Up Line Protection** ..... 240

7 Muxponder and Transponder Testing ..... 242

**Data Path Testing** ..... 242
Fiber Plant Verification ..... 242
XKL's Bit Error Ratio Test (BERT) ..... 245
**Testing with an External Source** ..... 249
Systems With a Crossbar Switch ..... 249
Systems Without a Crossbar Switch ..... 253

**8 Troubleshooting ..... 255**

**Introduction ..... 255**
**Create a Saved Configuration for Backup ..... 255**
Operator Notification ..... 256
**Crash Recovery ..... 256**
Automatic Recovery from a Warm Restart ..... 257
Automatic Recovery from a Cold Boot or Power Recycle ..... 257
Manual Crash Recovery Only if Automatic Recovery Fails ..... 257
Diagnosis ..... 257
**Console Procedures ..... 259**
**Recovery Mode ..... 261**
**Using the Debug Command ..... 263**

**A Configuration File ..... 264**

**Default Configuration File ..... 264**
**Configuration Examples ..... 265**
Sample Configuration 2 ..... 267
**SpectraPath Provisioner Pair Configuration Example ..... 270**

**B Optical Device Specifications ..... 276**

**Recommended Transceiver Sensitivity Levels ..... 276**
**Amplifier Specifications ..... 278**
**DGE-OCM Specifications ..... 281**
**WSS & OCM Specifications ..... 281**

**C Example of a DarkStar Optical Pathway ..... 283**

**DSM10-10 System ..... 283**

**D DarkStar Point-to-Point Management Network Using OSCs 285**

**Point-to-Point Network Example ..... 285**
DS1 Configuration ..... 286
DS2 Configuration ..... 286
Terminal A ..... 286
Terminal B ..... 287

**E Available Protocols ..... 288**

**Associated Data Rates and Encapsulations ..... 288**

Displaying Encapsulation Types ..... 289

**F Glossary ..... 290**

**Terms ..... 290**

# List of Figures

DarkStar® DSM10-10 . . . . . 4
DarkStar® DSM10-5R . . . . . 4
DarkStar® DQM10 (12-Channel) with Expansion . . . . . 5
DarkStar® DQM100 . . . . . 6
DarkStar® DQM400-4 . . . . . 6
DarkStar® DQT10 (36-Channel) . . . . . 7
DarkStar® DQT100 . . . . . 7
DarkStar® DQT400-12 . . . . . 8
DarkStar DMD-P Mux/Demux Device . . . . . 10
DarkStar® DMD-A Mux/Demux with Amplification System . . . . . 10
DarkStar® DLA In-Line Amplification System (2U) . . . . . 12
DarkStar® DUA Utility Amplification System (2U) . . . . . 13
SpectraPath ProvisionerTM Flexible Spectrum System (1U) . . . . . 14
SpectraPath IlluminatorTM System (1U) . . . . . 14
DarkStar® DFM400-12 . . . . . 15
DarkStar® DFX400-12 . . . . . 16
IPoDWDM using DUA . . . . . 19
DSM10-10 Point-to-Point . . . . . 20
DQT10 + DMD-A with Line Protection . . . . . 21
DQT400-12 48-Channel . . . . . 22
DQT400-4 + DQT10 + DMD-A . . . . . 23
Amplified Links Using DLA . . . . . 24
DLA: Location 3 Connected to Mid-Stage Port . . . . . 24
SpectraPath Provisioner Ring using Express Ports . . . . . 25
DFM400-12 4 channel . . . . . 26
DFX400-12 4 channel + Illuminator . . . . . 27
Rail Assembly Full View . . . . . 38
Slide Rail: Retracted View and Extended View . . . . . 39
Fastening the L-Brackets to the Chassis . . . . . 39
Adjusting Slide Bracket to Outer Rail . . . . . 40
Attaching Outer Rails to 4-Post Rack . . . . . 40
Extending the Middle Rails Out . . . . . 41
Sliding Chassis Into Middle Rail . . . . . 41
Installing Lock Screws . . . . . 42
Fully Assembled 23-inch 2-Post Rack . . . . . 43

Bracket Assembly Installed onto Rack Posts. . . . . 44
Mounting Middle and Outer Slide Rails . . . . . 44
Installing Slide Rail . . . . . 45
Installing Chassis onto 2-Post Rack . . . . . 46
Installing the Lock Screws. . . . . 46
Installing the 2U Front Mounting Kit onto Chassis. . . . . 47
Console Terminal Connected to the DMD-A . . . . . 48
RJ-45 Modular Jack: Pinout View . . . . . 48
DC Power Connections . . . . . 50
DarkStar Hardware Reset Button . . . . . 51
DarkStar Ethernet Ports . . . . . 77
Switching Loop. . . . . 79
System LEDs and Front Reset Button . . . . . 88
OSC LEDs in DMD-A with Line Protection . . . . . 90
Wave LEDs in a DQT10 . . . . . 90
Wave LEDs in a DQT400-4. . . . . 90
Client LEDs . . . . . 91
Line Active LEDs in DMD-A with Line Protection . . . . . 91
Amp Status LEDs in DMD-A with Line Protection. . . . . 92
Hot Swap a Power Supply Module. . . . . 114
Replacing Fan Modules . . . . . 115
Replace Line Transceiver . . . . . 116
Replace Line Transceiver (cont.) . . . . . 117
Connecting Two DQM10 Muxponders. . . . . 121
Connecting Two DQM100 Muxponders . . . . . 125
Connecting Two DSM10-10 Muxponders . . . . . 131
Connecting Two DQM400-4 Muxponders . . . . . 135
Connecting Two DFM400-12 Muxponders. . . . . 139
Connected Pair of DQT10 Transponder and DMD-A With Line Protection 145
Connected Pair of DQT100 Transponder and DMD-A With Line Pro. . . . . 150
Connected Pair of DAT100-8 Systems . . . . . 157
Combining Multiple DAT100-8 Systems using DWDM Line Transceivers . 158
Combining DAT100-8 System and DQM400-4 . . . . . 159
Connected Pair of DQT400-4 Transponder and DMD-A Systems . . . . . 164
Connected Pair of DQT400-12 Transponder and DMD-A With Line Pro. . . 169
Connected Pair of DFX400-12 Transponder and Illuminator Systems . . . . 174
DMD-A with Input and Output EDFA, and Line Protection. . . . . 179
DLA- Inline Amplifier. . . . . 187
Amplified Links Using DLA . . . . . 188
DLA: Location 3 Connected to Mid-Stage Port . . . . . 188
DUA- Utility Amplifier. . . . . 196

Examples of a network using DUAs . . . . . 197
SpectraPath Provisioner . . . . . 207
SpectraPath Provisioner in Ring topology . . . . . 208
SpectraPath Illuminator . . . . . 220
Setting EDFAs Automatically . . . . . 234
DQM10 . . . . . 243
DQM100 . . . . . 243
DSM10 -10 . . . . . 243
DQM400-4 . . . . . 243
DFM400-12 . . . . . 243
DQT10 . . . . . 244
DQT100 . . . . . 244
DQT400-4 . . . . . 244
DFX400-12 . . . . . 244
DQT10 Transponders and BERT . . . . . 245
DQM10 Muxponders and BERT . . . . . 245
DQM400-4 Muxponders and BERT . . . . . 245
DFM400-12 Muxponders and BERT . . . . . 246
Transponders: Router/Switch #1 and Client 0 Loopback . . . . . 249
Muxponders: Router/Switch #1 and Client 0 Loopback . . . . . 250
Closeup View of Router/Switch #1 and Client 0 Loopback . . . . . 250
Transponders: Loopback Location 2 Wave Interface . . . . . 251
Muxponders: Loopback Location 2 Wave Interface . . . . . 251
Transponders: Transport Testing at 10GE . . . . . 252
Muxponders: Transport Testing at 10GE . . . . . 252
Transponders: Transport Testing at 400GE . . . . . 253
Muxponders: Transport Testing at 400GE . . . . . 253
Optical and Electrical Signal Pathways Through a DSM10-10 System . . . . 283

# List of Tables

Transceivers Used in DarkStar Systems . . . . . 2
Available System Configurations Using DMD . . . . . 9
Amplification Systems Comparison . . . . . 11
Available System Configurations Using DFI . . . . . 17
Key Benefits of DarkStar Systems . . . . . 28
Optical Modules in a DarkStar System . . . . . 31
Command Prompts . . . . . 32
Moving Between Disable, Enable, and Configure Modes . . . . . 32
Conventions for DXMOS Syntax . . . . . 33
DXMOS Keyboard Shortcuts . . . . . 34
Parts List for 19-inch, 4-Post Rack . . . . . 38
Parts List for 19-inch and 23-inch 2-Post Rack . . . . . 43
Parts List for 2U Front Mounting Kit . . . . . 47
RJ-45 Modular Jack: Pinout Configuration . . . . . 49
DarkStar DC Power Connection Matrix . . . . . 50
Boot & Recover Scenarios . . . . . 52
Different Types of Reboot . . . . . 53
Initial Factory Settings . . . . . 55
Create a Running Configuration File . . . . . 59
Supported Authentication Methods . . . . . 72
SNMP Parameters for Initial Configuration . . . . . 81
Legend: LED Status Indicators . . . . . 88
System LED Patterns . . . . . 89
EDFA Alarm States and LEDs (DLA, DMD-A, DUA systems only) † . . . . . 92
Amplifier Alarms . . . . . 93
Show Modules, Show Management, and Show Environment Commands 94
Temperature Thresholds . . . . . 96
XKL MIB Groups . . . . . 109
Client VIF Number Table . . . . . 129
Client VIF Number Table . . . . . 155
Saved Configuration Files . . . . . 255
System Troubleshooting Matrix . . . . . 259
Networking Troubleshooting Matrix . . . . . 260
Recovery Mode Commands . . . . . 261
Determining Amplifier Power for DMD-A Systems . . . . . 278
Line Amplifier Output Power Calculation . . . . . 278

Determining Amplifier Power for DUA Systems . . . . . 279
Individual Amplifier Output Power Calculation . . . . . 279
Minimum Required Total Input Power (dBm) by DarkStar Model . . . . . 280
EDFA Optical Specifications . . . . . 280
Raman Optical Specifications . . . . . 281
DGE-OCM Optical Specifications . . . . . 281
WSS & OCM Optical Specifications . . . . . 282
Available Protocols, Data Rates and Corresponding Encapsulation . . . . . 288

# 1

# Introduction

## 1.1 DarkStar Product Overview

The DarkStar family of products is an integrated suite of fiber-optic networking systems used to create custom fiber-optic network topologies to meet virtually any business need. DarkStar products use both dense wavelength division multiplexing (DWDM) optical network hardware and management interface software to achieve data transmissions over extended distances at high data rates.

DarkStar networks allow businesses to circumvent the exorbitant cost of leasing services and equipment by taking advantage of the increasing availability and economy of unlit or dark fiber. By developing and managing a DarkStar network directly, businesses can create proprietary, carrier-class, fiber-optic networks with a significantly lower total cost of ownership.

DarkStar networks have been designed for use by network administrators. The operating system offers a simple, command-line interface with router-like operation that will be familiar to any enterprise network administrator. For a complete listing of the advantages and solutions provided by DarkStar products, see Key Benefits of DarkStar Systems.

- ***Muxponders and Transponders*** – A DarkStar network consists of at least two DarkStar optical networking systems acting as endpoints. Additional DarkStar networking systems, DarkStar amplifier systems, or DarkStar combiner systems can be added to enable extended network designs, and enhance transport performance.
- ***Inline Amplifiers and Utility Amplifiers***– DarkStar amplifier systems and amplifier components maximize the transmission distance of DarkStar networks. In general, a simple network with paired optical networking systems supports transmission distances up to 70km; systems employing amplification can achieve transmission distances up to 150km. By including inline amplifiers, transmission distances up to 2000km are possible.
- ***SpectraPath***– DarkStar systems with flex-grid capabilities have configurable spectrum components. These may include Optical Channel Monitoring (OCM), equalization of optical channel powers, and Wavelength Selective Switching.
- ***Redundancy*** – DarkStar systems can provide redundant failover through model features, component specifications, and network design. Consult XKL about the best ways to achieve redundant failover in your own network designs.
- ***MediaLight*** – Optical networks leveraging DarkStar MediaLight products provide muxponding, transponding, and/or the ability to provide media conversion functionality.

DarkStar optical networking systems are responsible for transmission and reception of data over fiber-optic cable and form the core of any DarkStar network. The primary features of optical networking systems are as follows:

- Single-mode (SM) and multi-mode (MM) transceivers, used to connect customer equipment to DarkStar systems.
- DWDM line transceivers used to aggregate and transport customer data across longer fiber segments.
- Port densities of 4 ports to 36 ports per 1U or 2U, depending on the DarkStar model.
- Up to 96 DWDM channels per fiber pair.
- Optional integrated amplification (EDFAs).

Other important features include:

- Low power consumption.
- Minimal rack space: Every system and device in the DarkStar family occupies 1U or 2U of space in a standard equipment rack.

- Redundant cooling: All powered DarkStar products include hot-swappable fan modules.
- Redundant power: All powered DarkStar products include 1+1 redundant, AC or DC, hot-swappable power supply modules.
- EDFA solutions with adjustable gain.

### 1.1.1 Comparing Transceivers Used in DarkStar Systems

DarkStar optical networking systems transmit and receive data over fiber-optic cable and form the core of any DarkStar network. Table 1-1 compares the transceivers of DarkStar muxponder and transponder systems.

**TABLE 1-1. Transceivers Used in DarkStar Systems**

| Transceiver Type | DSM10-10<br>DSM10-5R | DQM10<br>DQT10 | DQM100<br>DQT100 | DQM400 | DQT400 | DFM400<br>DFX400 |
|---|---|---|---|---|---|---|
| SFP+ client | 10 | | | | | |
| QSFP+ client | | 3, 6, or 9 | 3 or 6 | | | |
| QSFP28, QSFP-DD client | | | | 1, 2, 3, or 4 | 1, 2, 3, 4, or 12 | |
| SFP+ wave* | 10 | 12, 24, or 36 | | | | |
| CFP wave (trunk)* | | | 1 or 2 | | | |
| OSFP wave* | | | | 1, 2, 3, or 4 | 1, 2, 3, 4, or 12 | |
| QSFP28, QSFP-DD module** | | | | | | 2-24 |
| * The term “wave” (or “trunk”) refers to a DWDM line transceiver. | | | | | | |
| **DF*400 allows any combination of client/DWDM transceivers in a pair. | | | | | | |

# 1.2 Hardware

DarkStar technology comprises the following product families:

- DarkStar Muxponders and Transponders
- DarkStar Mux/Demux - DMD
- DarkStar Amplification
- DarkStar SpectraPath
- DarkStar MediaLight

For associated use cases, see Network Topology Examples.

## 1.2.1 DarkStar Muxponders and Transponders

With DarkStar muxponders and transponders, organizations can easily plan for increasing capacity to address bandwidth needs, as well as to meet the demand in the growth of mobile devices, streaming video, and bandwidth intensive applications.

The DarkStar muxponder and transponder products include:

- DSM10 Muxponders
- DQM10 Muxponders
- DQM100 Muxponders
- DQM400 Muxponders
- DQT100 Transponders
- DQT400 Transponders

### 1.2.1.1 DSM10 Muxponders

Part of the DarkStar DWDM Muxponder family of products, the DSM10-10 and DSM10-5R support 10 soft-configurable channels of 1G and 10G Ethernet, 1G - 10G Fiber Channel, and also OC48 and OC192 Sonet. Options include EDFAs (input and output), dispersion compensation, AC or DC power, and a variety of client transceivers. Available in a 1 rack unit (1U) chassis.

**Product Configurations:**

- DSM10-10: 10 x 10G on one fiber pair. See Figure 1-1.
- DSM10-5R: 2 x (5 x 10G) East/West on two fiber pairs). See Figure 1-2.

**Capacity/Growth:**

- DSM10-10 Grows to 40 channels (400G) by adding the DarkStar DMD (i.e., DMD-A or DMD-P) with 4-band filter.
- DSM10-5R: Grows to 40 channels (400G East/400G West) by adding the DarkStar DMD (i.e., DMD-A or DMD-P) with 4-band filter.

**FIGURE 1-1. DarkStar® DSM10-10**

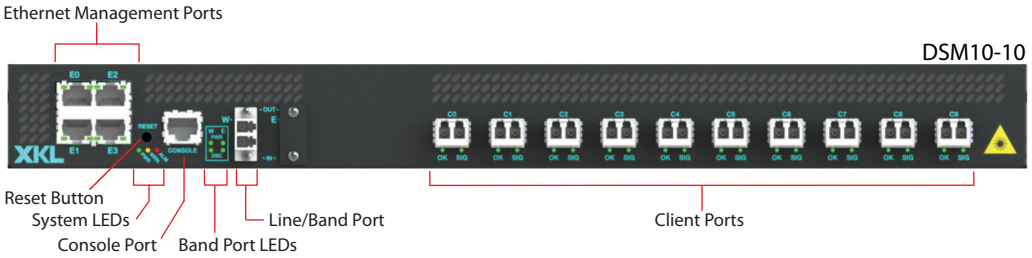


**FIGURE 1-2. DarkStar® DSM10-5R**

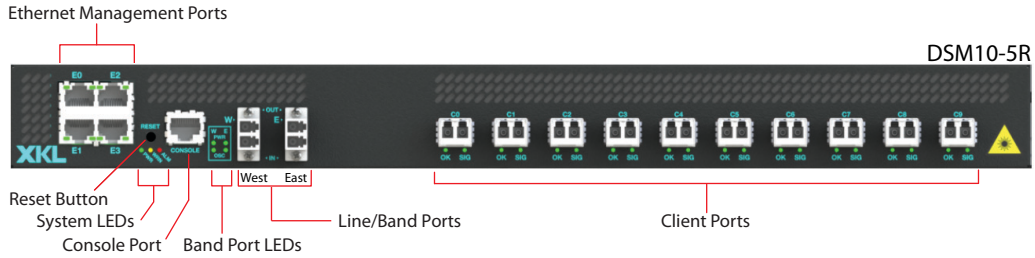

### 1.2.1.2 DQM10 Muxponders

Part of the DarkStar DWDM Muxponder family of products, DQM10 systems support 12, 24, or 36 soft-configurable channels of 1G and 10G Ethernet, 2G - 10G Fiber Channel, and also OC48 and OC192 Sonet. Options include EDFAs (input and output), dispersion compensation, AC or DC power, and a variety of client transceivers. Available in a 1 rack unit (1U) or 2 rack unit (2U) chassis.

**Product Configurations:**

- 12 Channel (120G) on one fiber pair. See Figure 1-3.
- 24 Channel (240G) on one fiber pair.
- 36 Channel (360G) on one fiber pair.

**Capacity:** 120G, 240G, or 360G with no external mux/demux filter required. The mux/demux filter is integrated in the DQM10.

**FIGURE 1-3. DarkStar® DQM10 (12-Channel) with Expansion**

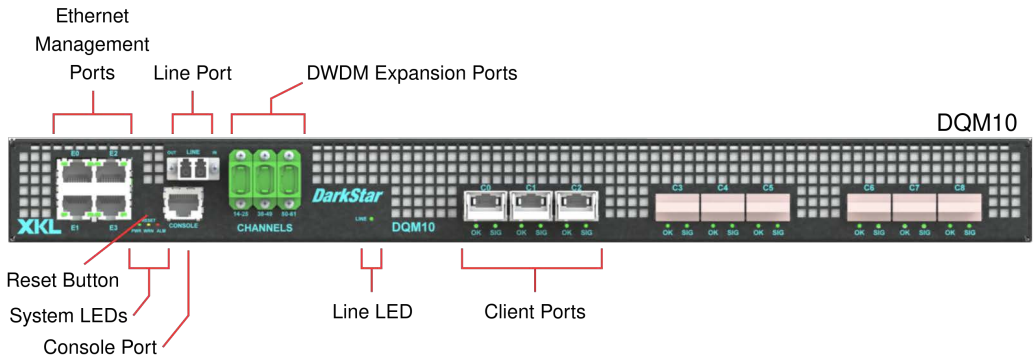


### 1.2.1.3 DQM100 Muxponders

Part of the DarkStar DWDM Muxponder family of products, DQM100 systems come with either one or two 100G DWDM channels employing tunable, CFP 100Gbps coherent transceivers. DQM100 systems also utilize a unique statistical multiplexing technology to manage the aggregation of 10G Ethernet services for better bandwidth shaping and control. Options include EDFAs (input and output), AC or DC power, and a variety of client transceivers. Available in a 1 rack unit (1U) or 2 rack unit (2U) chassis.

The DQM100 muxponder, shown in Figure 1-4, has two front-panel access ports: a Line port and an Optical Add Drop Multiplexer (OADM) port. The Line port is the egress/ingress port for one or two trunks (i.e., channels) that carry the DWDM customer data and the OSC channel, all of which are optically multiplexed onto one fiber pair.

**Product Configurations:**

- 1-Channel; 12 or 24 10GE client-port configurations.
- 2-Channel; 12 or 24 10GE client-port configurations.

**Capacity/Growth:** With the Optical Add Drop Multiplexer (OADM) port, up to three DQM100 systems may be cascaded to allow for up to a six-channel subsystem on one fiber pair. The network can grow beyond this by connecting each group of systems to a single band port of a DarkStar DMD (i.e., DMD-A or DMD-P) with 6-band filter, thus allowing for up to 36 100G channels (again, on the same fiber pair).

**FIGURE 1-4. DarkStar® DQM100**

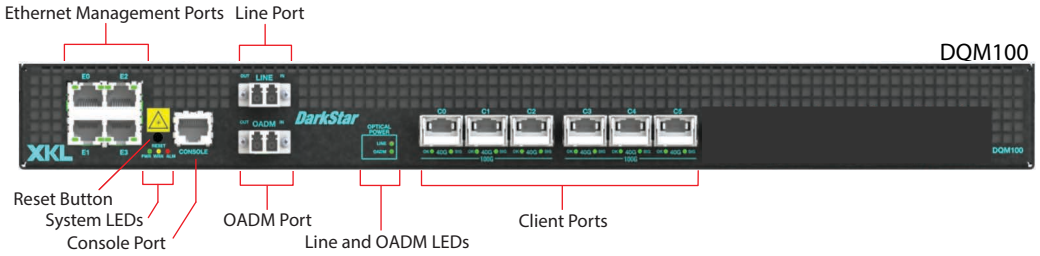


### 1.2.1.4 DQM400 Muxponders

Part of the DarkStar Muxponder family of products, DQM400 systems come with tunable OSFP 400Gbps coherent line transceivers that enable users to soft-configure the aggregation of 100GE and 400GE services, thus providing maximum flexibility for growth. On the client side, DQM400 systems support QSFP28 and QSFP-DD transceivers for a variety of customer handoffs: 100G SR4, 100G LR4, 400G DR4, and others per customer request. Options include AC or DC power, as well as input and output EDFAs. Available in a 1 rack unit (1U) or 2 rack unit (2U) chassis.

**Product Configuration:** DQM400-4: the four-channel system supporting 1.6Tb of capacity. See Figure 1-5.

**Capacity/Growth:** A network built with DQM400 1, 2, 3, or 4 systems starts at 1x100GE and can grow to 12 channels of 400GE by adding two DQT400 1, 2, 3, or 4 systems. This supports 48x100GE, 12x400GE, or a mix of 100GE and 400GE, by soft-configuring the client service. Alternatively, a network built with DQM400-12 systems starts at 12x400GE and can grow to 48 channels of 400GE by adding three DQT400-12 systems. This supports 192x100GE, 48x400GE, of a mix of 100GE and 400GE.

**FIGURE 1-5. DarkStar® DQM400-4**

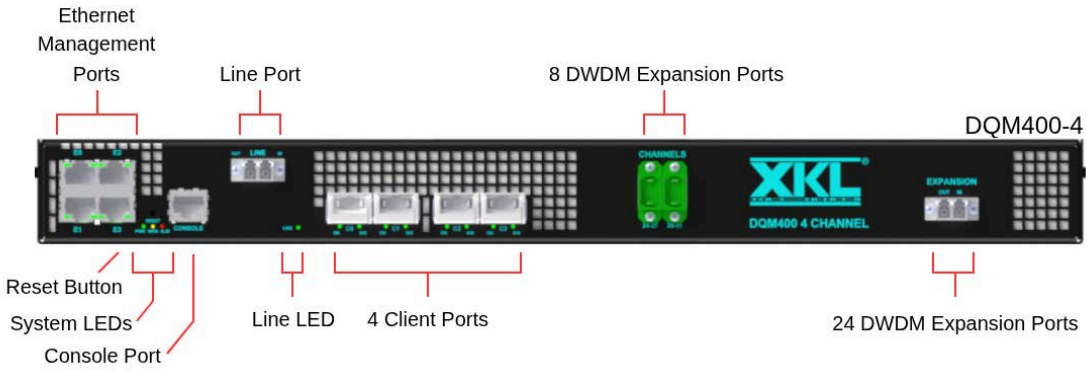


### 1.2.1.5 DQT10 Transponders

Part of the DarkStar Transponder family of products, DQT10 systems support 12, 24, or 36 soft-configurable channels of 1G or 10G Ethernet, 2G - 10G Fiber Channel, and also OC48 and OC192 Sonet. The channels themselves use tunable SFP+ line transceivers. Options include AC or DC power, and a variety of client transceivers. Available in a 1 rack unit (1U) or 2 rack unit (2U) chassis.

**Product Configurations:**

- 12 Channel (120G).
- 24 Channel (240G).
- 36 Channel (360G). See Figure 1-6.

**Capacity/Growth:** 120G, 240G, or 360G per chassis. A DQT10 requires the DMD-A or DMD-P Mux/Demux. A network based on the DQT10 and DMD solution can grow to 48 or 96 channels. Alternatively, the DQT10 can provide alien wave injection into an existing customer network.

**FIGURE 1-6. DarkStar® DQT10 (36-Channel)**

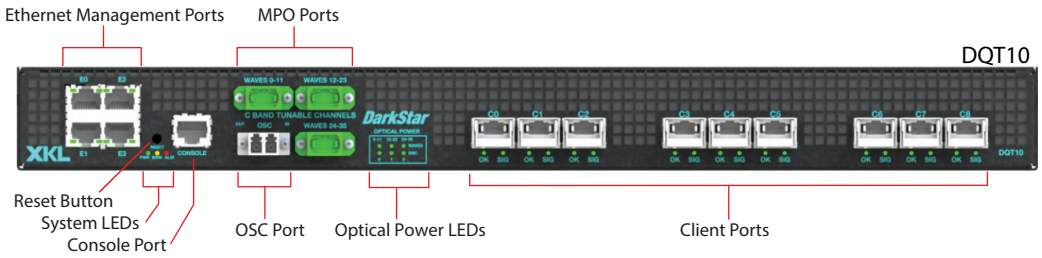


### 1.2.1.6 DQT100 Transponders

Part of the DarkStar Transponder family of products, DQT100 systems come with either one or two 100G DWDM channels. The 100G data channel can use either tunable, CFP 100Gbps coherent transceivers or non-DWDM short-reach transceivers. DQT100 systems also utilize a unique statistical multiplexing technology to manage the aggregation of 10G Ethernet services for better bandwidth shaping and control. Options include AC or DC power, and a variety of client transceivers. Available in a 1 rack unit (1U) or 2 rack unit (2U) chassis.

The DQT100 system is shown in Figure 1-7. In both the 1-Channel and 2-Channel systems, there are four front-panel access ports: two 100G data Trunk ports (i.e., channels) and two OSC ports, all of which are optically multiplexed onto one fiber pair by the DMD-A or DMD-P Mux/Demux.

**Product Configurations:**

- 1-Channel; 12 or 24 10GE client-port configurations.
- 2-Channel; 12 or 24 10GE client-port configurations.

**Capacity/Growth:** A DQT100 requires the DMD-A or DMD-P Mux/Demux. A network based on the DQT100 and DMD solution can grow to 48 or 96 channels. Alternatively, the DQT100 can provide alien wave injection into an existing customer network. **Note:** For the solution using the non-DWDM short-reach transceivers, refer to XKL DQT100 application notes describing the associated use cases.

**FIGURE 1-7. DarkStar® DQT100**

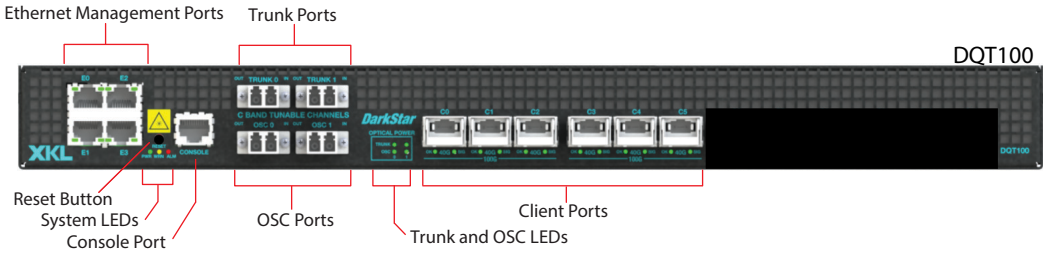


### 1.2.1.7 DQT400 Transponders

Part of the DarkStar Transponder family of products, DQT400 systems support tunable OSFP 400Gbps coherent line transceivers that can be soft-configured to support 100GE, 4x100GE, or 1x400GE, thus providing maximum flexibility for growth. A DarkStar Mux/Demux (i.e., DFI, DMD-A, or DMD-P) filter is used to multiplex these DWDM channels, and also to stack multiple DQT400 systems. On the client side, DQT400 solutions support QSFP28 and QSFP-DD transceivers for customer handoffs. Options include AC or DC power, and a variety of client transceivers. Available in a 1 rack unit (1U) chassis.

**Product Configurations:**

- DQT400: the 1, 2, 3, or 4-Channel system supporting up to 1.6Tb of capacity.

- DQT400-12: the 12-Channel system supporting 4.8Tb of capacity. See Figure 1-8.

**Capacity/Growth:** A network of DQT400 systems can grow to 48 DWDM channels by connecting a DarkStar Mux/Demux (i.e., DFI, DMD-A, or DMD-P) with 48-channel filter, thus allowing for up to 192 100GE client services or 48 400GE client services (on one fiber pair).

**FIGURE 1-8. DarkStar® DQT400-12**

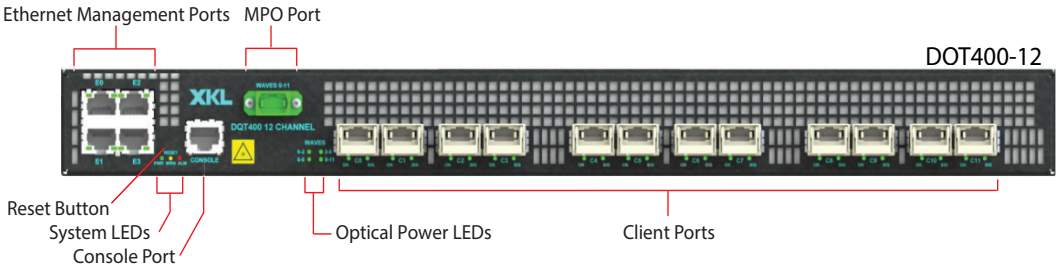

### 1.2.2 DarkStar Mux/Demux - DMD

The passive DMD-P and the active DMD-A systems enable growth and are an integral element of DarkStar optical networks. These systems provide mux/demux filters and as well as channel monitoring.

The DMD (DMD-P or DMD-A) enables multiple DarkStar Muxponder or Transponder systems to be aggregated optically onto a single fiber pair or two fiber pairs. Table 1-2 summarizes the possible ways to aggregate multiple DarkStar systems. **Note:** Different Transponder systems can share the same DMD. For example, DQT10 and DQT400 systems can be aggregated optically with the same DMD.

**TABLE 1-2. Available System Configurations Using DMD**

| Optional Feature | DMD-P | DMD-A |
|---|---|---|
| **96 channel filter – 50GHz channel spacing<br>ITU channels 14-61.5, 1566.31nm – 1528.38nm** | Y | Y |
| **48 channel filter – 100GHz channel spacing<br>ITU channels 14-61, 1566.31nm – 1528.77nm** | Y | Y |
| **12 channel filter – 100GHz channel spacing<br>ITU channels 20-31, 1561.42nm – 1552.52nm** | Y | Y |
| **12 channel filter – 100GHz channel spacing<br>ITU channels 32-43, 1551.72nm – 1542.94nm** | Y | Y |
| **12 channel filter – 100GHz channel spacing<br>ITU channels 44-55, 1542.14nm – 1533.47nm** | Y | Y |
| **12 channel filter – 200GHz channel spacing<br>ITU channels 15-37, 1565.50nm – 1547.72nm** | Y | Y |
| **12 channel filter – 200GHz channel spacing<br>ITU channels 39-61, 1546.12nm – 1528.77nm** | Y | Y |
| | | |
| **EDFA(s)** | N | 0-4 |
| **Raman** | N | 0-1 |
| **Optical Protection Switch (OPS)** | N | Y |
| **OTDR** | N | 0-2 |

#### 1.2.2.1 DMD-P

The DMD-P, as shown in Figure 1-9, is a passive device (i.e., not requiring power or cooling) that offers the same optical filters as the DMD-A but without the DMD-A's amplification capabilities.

DMD-P devices may be used to scale the capacity of DarkStar networks by combining the wavelengths of multiple optical networking systems. Total capacity depends on the model of optical networking systems and the number of channels employed. Features of a DMD-P:

- 12-channel, 48-channel, and 96-channel options
- Supports ring or point-to-point topologies
- Integrated OSC add/drop
- Passive device

**FIGURE 1-9. DarkStar DMD-P Mux/Demux Device**




DMD-P

### 1.2.2.2 DMD-A

The DMD-A, as shown in Figure 1-10, is an active system that provides amplification capabilities. The DMD-A integrates a variety of DWDM mux/demux filters to create the ideal, low profile solution. All components in this system can be managed and controlled via the DXMOS operating system, which is the common operating system for all products in the XKL DarkStar family of optical networking solutions. The DMD-A system integrates 48-channel or 96-channel mux/demux filters, or band combiner filters, and optionally includes EDFAs, Raman amplifier, dispersion compensation modules (DCM), as well as line protection via the integrated OPS.

For more information on DMD-A amplification capabilities, see DarkStar Amplification.

**FIGURE 1-10. DarkStar® DMD-A Mux/Demux with Amplification System**

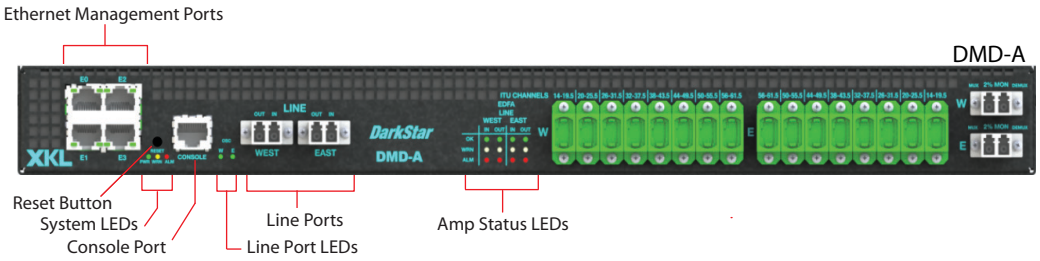


## 1.2.3 DarkStar Amplification

There are three standalone DarkStar amplification systems:

- DLA: DarkStar Line Amplifier, as shown in Figure 1-11
- DMD-A: DarkStar Mux/Demux with Amplification, as shown in Figure 1-10
- DUA: DarkStar Utility Amplifier, as shown in Figure 1-12

Depending on the DarkStar model, DarkStar networks and systems currently support EDFAs (Erbium Doped Fiber Amplifiers) and Raman amplifiers. Amplifiers generally serve three purposes in a system:

- ***Output (Booster)*** – Increase signal power into the fiber.
- ***Line Amplification*** – Increase repeater spacing (DLA).
- ***Input (Preamp)*** – Improve receiver signal power.

Each amplification type and its manner of deployment has unique characteristics and benefits. The amplification technology and configuration used depends on transmission distances, network topology, and fiber type, among other factors that are taken into account when building a network. In addition to standalone amplifiers, some amplification technologies may be directly integrated into optical networking systems.

Table 1-3 offers a comparison between the DLA, DMD-A, and DUA systems.

**TABLE 1-3. Amplification Systems Comparison**

| Feature | DLA | DMD-A | DUA |
|---|---|---|---|
| Up to 4 EDFAs | ✓ | ✓ | |
| Up to 8 EDFAs | | | ✓ |
| Raman Amplifiers | ✓ | ✓ | ✓ |
| Integrated dispersion compensators | ✓ | ✓ | |
| Integrated tilt and equalizer compensators | ✓ | | |
| Mid-stage access | ✓ | | |
| Integrated Mux/Demux Filters | | ✓ | |

DarkStar systems can automatically control the amplifier(s) by adjusting the optical gain or power as necessary, instead of requiring the user to control them. To do this, the user automatically configures all of the amplifiers in a DMD-A, DLA, or DUA system with a single command—`control automatic`. Alternatively, the user can individually control each amplifier in the system by using one of the following two automatic control modes:

- Automatic (Gain Control): Adjust the amplifier gain to obtain an XKL-recommended optimal maximum power per channel.[1]
- Automatic (Power Control): Adjust the amplifier output power to obtain an XKL-recommended optimal maximum power per channel.[1]

If you want to control the EDFA manually, issue the following amplifier commands: `control manually-set gain` and `control manually-set power`. These commands enable you to individually control each amplifier in the system.

Information related to setting up an amplifier can be found in Amplifier Configuration. Standalone amplification systems share much of the same hardware and software as other DarkStar products, requiring only one set of general operating instructions and commands to manage any DarkStar products efficiently. For associated use cases, see Network Topology Examples.



*An EDFA uses erbium-doped optical fiber as a gain medium to amplify an optical signal. Inside the EDFA, the input optical signal and the pump laser are combined and passed through the erbium-doped fiber, where the signal is amplified.*

1. XKL-recommended optimal maximum power per channel is system, network, and topology dependent.

| | |
|---|---|
| ⚠ | **EDFAs and Raman amplifiers can produce high-energy signals that pose a risk to human eyesight. Furthermore, an improperly configured optical amplifier can damage optical receivers, both within the optical amplifier-equipped DarkStar systems and in remote systems connected to the optical amplifier-equipped system.** |

### 1.2.3.1 DLA

The DarkStar Line Amplifier is a fully integrated optical amplifier solution. All components in this system can be managed and controlled via the DXMOS operating system, which is the common operating system for all products in the XKL DarkStar family of optical networking solutions. The DLA also integrates all the required components to create a long-haul optical network, including EDFAs, Raman amplifiers, tilt and Static equalization filters, dynamic gain equalization filters and optical channel monitors (DGE/OCM), and dispersion compensation modules (DCM).

The optional integrated DCM is ideal for networks requiring dispersion compensation. These passive, Bragg grating-based filters provide the necessary dispersion compensation for any fiber type. Typically, these modules are required for signals using direct-detect transceivers.

DLA systems may also include optional DGE/OCM devices on each path to provide dynamic control and monitoring of each channel's power levels. These devices are typically used for long-haul networks with multiple DLAs.

A DLA system employs EDFAs and Raman amplifiers to implement optical amplification, allowing for increased distances between optical networking systems. The DLA supports up to two input EDFAs, up to two output EDFAs, and up to two Raman amplifiers. An example of a DLA 2U system is shown in Figure 1-11.

**FIGURE 1-11. DarkStar® DLA In-Line Amplification System (2U)**

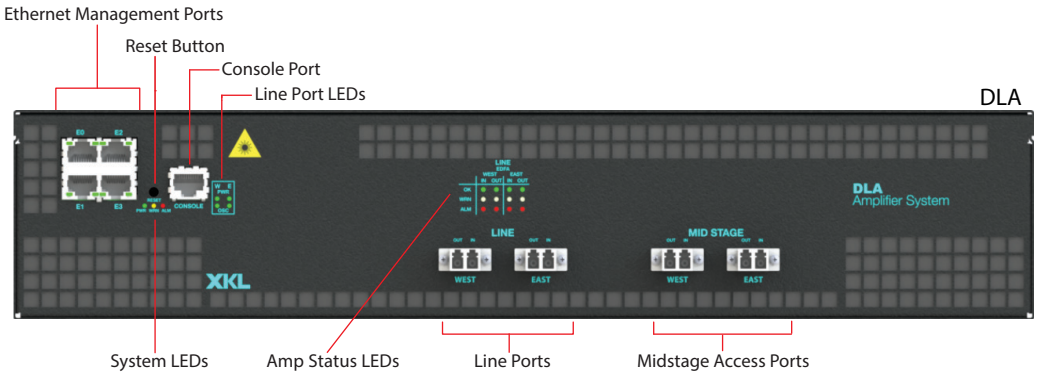


For details about the **DMD-A**, see section 1.2.2.2.

### 1.2.3.2 DUA

The DUA system, DarkStar Utility Amplifier, is a fully integrated optical amplifier solution. All components in this system can be managed and controlled via the DXMOS operating system, which is the common operating system for all products in the XKL DarkStar family of optical networking solutions. Each DUA system optionally includes up to 8 Erbium Doped Fiber Amplifiers (EDFAs), 2 Raman Amplifiers, and 4 OTDR transceivers. Note that if 1 or 2 Raman Amplifiers are included in the system build, then at most 4 EDFAs can be installed.

**FIGURE 1-12. DarkStar® DUA Utility Amplification System (2U)**

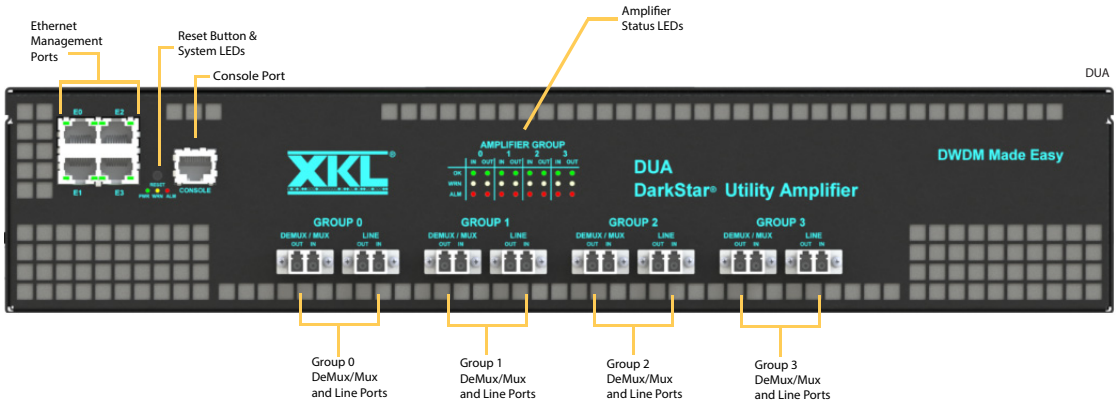


## 1.2.4 DarkStar SpectraPath

There are two SpectraPath systems equipped with flex-grid technology:

- SpectraPath Provisioner, as shown in Figure 1-13
- SpectraPath Illuminator, as shown in Figure 1-14

The SpectraPath Provisioner comes equipped with a Wavelength Selective Switch and an Optical Channel Monitor, each of which is used for channel balancing and monitoring. The Provisioner also supports EDFAs and Raman amplifiers to increase transmission distance.

The SpectraPath Illuminator comes equipped with an Optical Channel Monitor, which is used for channel monitoring. The Illuminator also supports EDFAs and Raman amplifiers to increase transmission distance.

SpectraPath systems can dynamically allocate spectrum using the band command. Additionally, the SpectraPath Provisioner can easily switch optical wavelengths using the connect command and balance optical power with the attenuate command. For more details on each of these commands, refer to the Command Reference on the XKL website.

| | |
|---|---|
| | *A WSS uses a Liquid Crystal on Silicon (LCoS) optical chip to redirect light to different fiber pairs and attenuate optical power. Inside the WSS, grating & focusing optical lenses are used with the LCoS chip to provide hitless, dynamic adjustments for allocated spectrum.* |

### 1.2.4.1 SpectraPath Provisioner

The SpectraPath Provisioner, also referred to as the DarkStar Flexible Spectrum (DFS) system, is a fully integrated solution that includes amplifiers, optical channel monitors, and wavelength selective switches. All components in this system can be managed and controlled via the DXMOS operating system, which is the common operating system for all products in the XKL DarkStar family of optical networking solutions. Each Provisioner system optionally includes up to 2 Erbium Doped Fiber Amplifiers (EDFAs), 1 Raman Amplifier, and 1 OTDR transceiver. Required components are an Optical Channel Monitor (OCM), a Wavelength Selective Switch (WSS), and 1 OSC transceiver. The OCM is a single device that has 4 ports for monitoring 4 different fibers. The WSS is a dual device, one WSS is provisioned to be a Mux and the other a Demux. An example of a Provisioner 1U system is shown in Figure 1-13.

**FIGURE 1-13. SpectraPath Provisioner™ Flexible Spectrum System (1U)**

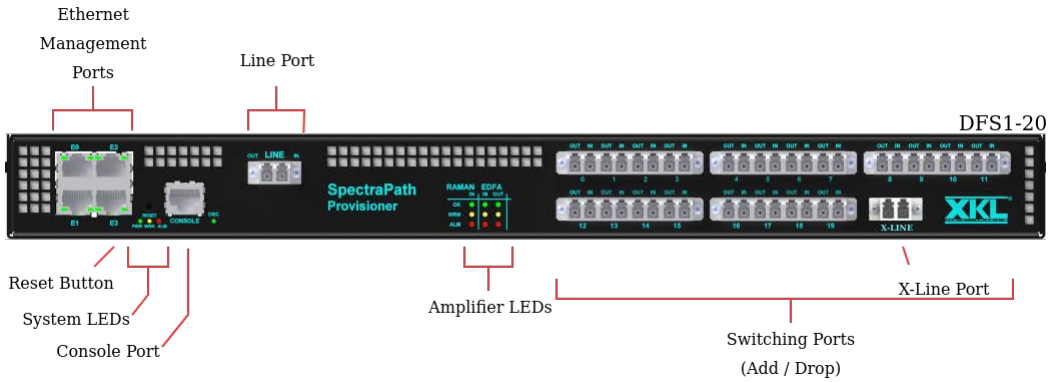


### 1.2.4.2 SpectraPath Illuminator

The SpectraPath Illuminator, also referred to as the DarkStar Flexible Illuminator (DFI) system, is a fully integrated solution that includes amplifiers and optical channel monitors. All components in this system can be managed and controlled via the DXMOS operating system, which is the common operating system for all products in the XKL DarkStar family of optical networking solutions. The DFI system integrates 12 or 48 channel mux/demux filters and optical channel monitors (OCM). Optionally, it includes Erbium Doped Fiber Amplifiers (EDFAs), Raman Amplifiers, optical protection switch, and an integrated OTDR. The OCM is a single device that has ports for monitoring a variety of different fibers.

**FIGURE 1-14. SpectraPath Illuminator™ System (1U)**

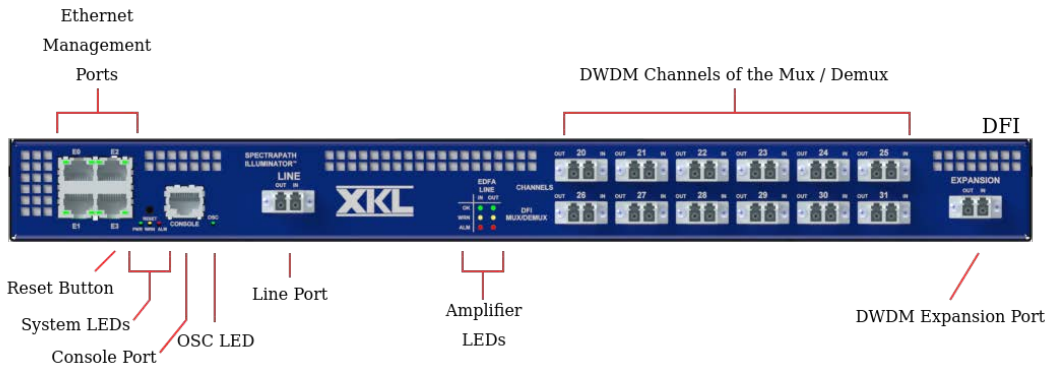


## 1.2.5 DarkStar MediaLight

The MediaLight family of products support muxponder, transponder, and media converter functionality.

- MediaLight Muxponders, as shown in Figure 1-15
- MediaLight Xponder, as shown in Figure 1-16

### 1.2.5.1 MediaLight Muxponders

Part of the DarkStar MediaLight Muxponder family of products, DFM400 systems come with tunable QSFP-DD 400Gbps coherent line transceivers that enable users to soft-configure the aggregation of 100GE and 400GE services, thus providing maximum flexibility for growth. On the client side, DFM400 systems support QSFP28 and QSFP-DD transceivers for a variety of customer handoffs: 100G to 400G. Options include AC or DC power, as well as input and output EDFAs, 100GHz-spaced or 200GHz-spaced 12-channel filters, OTDR, and OPS. Available in a 1 rack unit (1U) or 2 rack unit (2U) chassis.

**Product Configurations:**

- DFM400-12: 12-Channel system support 4.8Tb of capacity and expansion. See Figure 1-15.
- DFM400-12 with OPS: 12-Channel system supporting 4.8Tb of capacity and line protection.

**Capacity/Growth:** A network built with DFM400 systems starts at 1x100GE and can grow to 12 channels of 400GE. The DFM400 includes an expansion port that allows adding additional capacity by stacking more DFM400 systems or other DarkStar muxponders or transponders. In total, a solution based on the DFM400 supports up to 144x100GE, 36x400GE, or a mix of 100GE and 400GE, by soft-configuring the client service.

**FIGURE 1-15. DarkStar® DFM400-12**

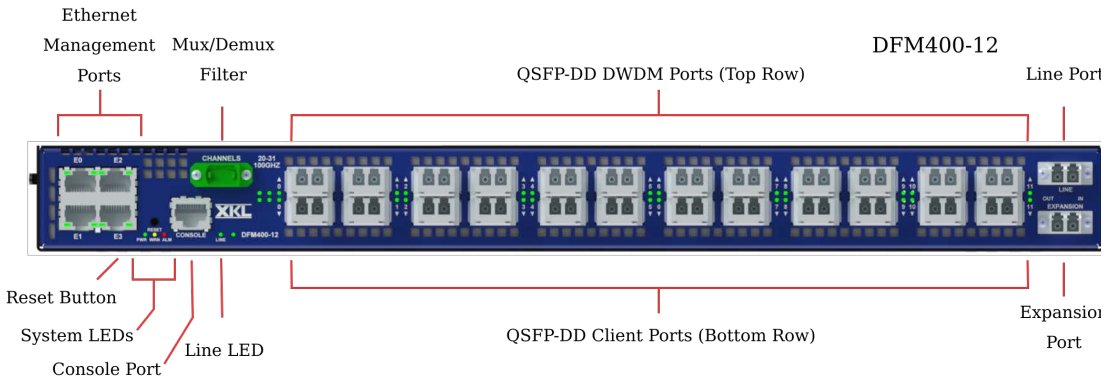


### 1.2.5.2 MediaLight Xponder

Part of the DarkStar MediaLight Xponder family of products, DFX400 systems can be configured with tunable QSFP-DD 400Gbps coherent DWDM transceivers that enable users to soft-configure the aggregation of 100GE and 400GE services, thus providing maximum flexibility for growth. On the client side, DFX400 systems support QSFP28 and QSFP-DD transceivers for a variety of customer handoffs: 100G to 400G. The DFX400 can also be configured as a media converter, converting 100G and 400G interfaces, for example: 100G LR4 to 100G LR.

A DarkStar Mux/Demux (i.e., DFI, DMD-A, or DMD-P) filter is used to multiplex DWDM channels, and also to stack multiple DFX400 systems. Options include AC or DC power, as well as an OTDR. Available in a 1 rack unit (1U) or 2 rack unit (2U) chassis.

**Product Configurations:**

- DFX400-12: 12-Channel system support 4.8Tb of capacity and expansion. See Figure 1-16.

**Capacity/Growth:** A network of DFX400 systems can grow to 48 DWDM channels by connecting a DarkStar Mux/Demux (i.e., DFI, DMD-A, or DMD-P) with 48-channel filter, thus allowing for up to 192 100GE client services or 48 400GE client services (on one fiber pair).

**FIGURE 1-16. DarkStar® DFX400-12**

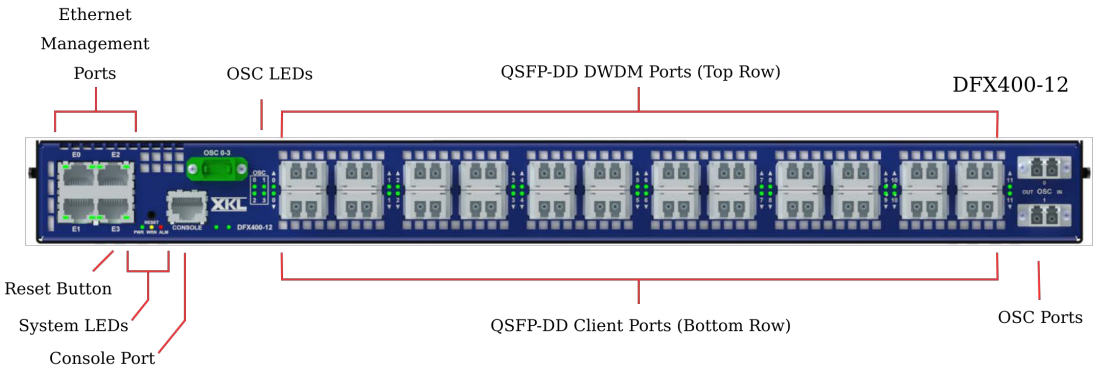

**TABLE 1-4. Available System Configurations Using DFI**

| Optional Feature | DFI |
|---|---|
| **48 channel filter – 100GHz channel spacing<br>ITU channels 14-61, 1566.31nm – 1528.77nm** | Y |
| **12 channel filter – 100GHz channel spacing<br>ITU channels 20-31, 1561.42nm – 1552.52nm** | Y |
| **12 channel filter – 100GHz channel spacing<br>ITU channels 32-43, 1551.72nm – 1542.94nm** | Y |
| **12 channel filter – 100GHz channel spacing<br>ITU channels 44-55, 1542.14nm – 1533.47nm** | Y |
| **12 channel filter – 200GHz channel spacing<br>ITU channels 15-37, 1565.50nm – 1547.72nm** | Y |
| **12 channel filter – 200GHz channel spacing<br>ITU channels 39-61, 1546.12nm – 1528.77nm** | Y |
| | |
| **EDFA(s)** | 0-4 |
| **Raman** | 0-1 |
| **Optical Protection Switch (OPS)** | Y |
| **OTDR** | 0-2 |
| **OCM** | Y |

# 1.3 Network Design

Requirements for designing a DarkStar network encompass more areas than can be detailed in this document. However, the following information provides a brief overview of key features and considerations in the design of a network. DarkStar systems can be used to build networks for metro, regional, or long-haul network access.

Most networks are point-to-point, ring, or mesh topologies. Networks designed around DarkStar systems are easily configured and flexible such that any of these topologies can be built from the same DarkStar solutions.

In any of these topologies:

- The minimum network design must connect (2) endpoints, but may be built out to accommodate designs as complex as needs require.
- Add-drop service may be incorporated at any node.

- Line protection (redundancy) is possible with the inclusion of a second fiber pair when using DarkStar systems equipped with optical path protection.
- Amplification can be included in network design to extend transmission distances.

Every DarkStar network is built around an optical budget that optimizes the amount of optical power required to transport light over required distances in a customer network. You can calculate your optical budget by using site installation metrics to determine the optical power required in a system. It is often mistakenly assumed that the more optical power a system offers, the better it will perform. In the world of optical networking, too much optical power can cause just as many problems with signal quality as too little. DarkStar systems can be configured accordingly with the correct specifications.

In designing and building an optical network, acquiring fiber access is an important consideration. Dark fiber is becoming increasingly available through a number of sources, including private network operators and municipalities, among others. There are also companies that specialize in assisting enterprises to locate or even install fiber services.

# 1.4 Network Topology Examples

The following figures represent examples of common networking solutions.


- Figure 1-17: IPoDWDM using DUA
- Figure 1-18: DSM10-10 Point-to-Point
- Figure 1-19: DQT10 + DMD-A with Line Protection
- Figure 1-20: DQT400-12 48-Channel
- Figure 1-21: DQT400-4 + DQT10 + DMD-A
- Figure 1-22: Amplified Links Using DLA
- Figure 1-23: DLA: Location 3 Connected to Mid-Stage Port
- Figure 1-24: SpectraPath Provisioner Ring using Express Ports
- Figure 1-25: DFM400-12 4 channel
- Figure 1-26: DFX400-12 4 channel + Illuminator


**FIGURE 1-17. IPoDWDM using DUA**

Switches and Routers, in which the DWDM transceivers are directly installed, i.e. IPoDWDM, connect to the DUA system through a Mux/Demux.

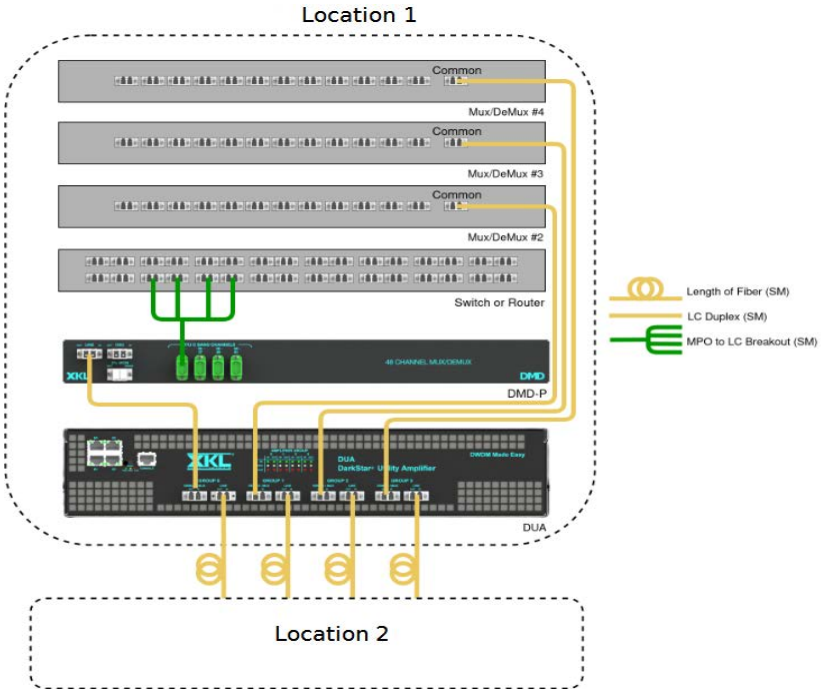

**FIGURE 1-18. DSM10-10 Point-to-Point**

The DSM10-10 systems, connected with duplex cable, provide ten circuits, or channels, between Location 1 and Location 2. This example shows five channels in use (the DSM10-10 uses 10G SFP+ client transceivers). There are five unused channels.

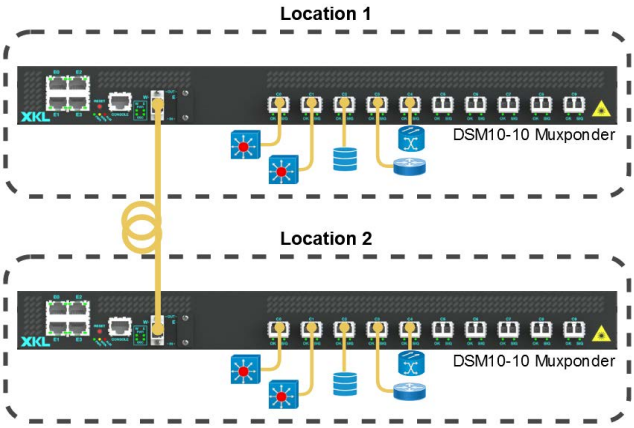

**FIGURE 1-19. DQT10 + DMD-A with Line Protection**

For the DMD-A with Line Protection, there is a primary path and a backup path, both of which use a duplex cable. Each green MPO cable contains 12 pairs of fibers. There are 36 protected circuits, or channels, available between Location 1 and Location 2. This example shows 20 channels in use (the DQT10 uses 4x10G QSFP+ client transceivers). There are 16 unused channels.

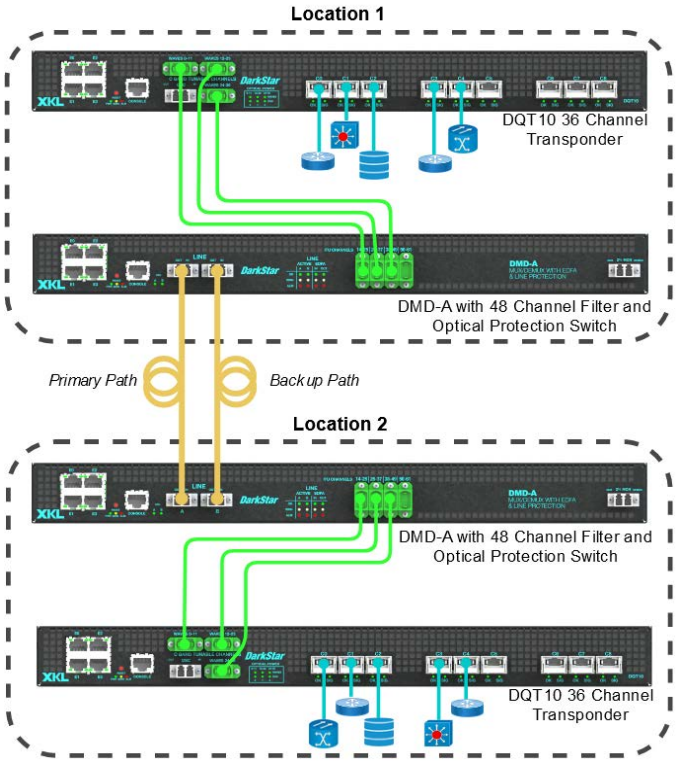

**FIGURE 1-20. DQT400-12 48-Channel**

The DQT400-12 systems, connected with duplex cable, provide 48 circuits, or channels, between Location 1 and Location 2. This example shows 32 channels in use and a total of 16 unused channels. (The DQT400-12 uses 100G QSFP28 or 400G QSFP-DD client transceivers.)

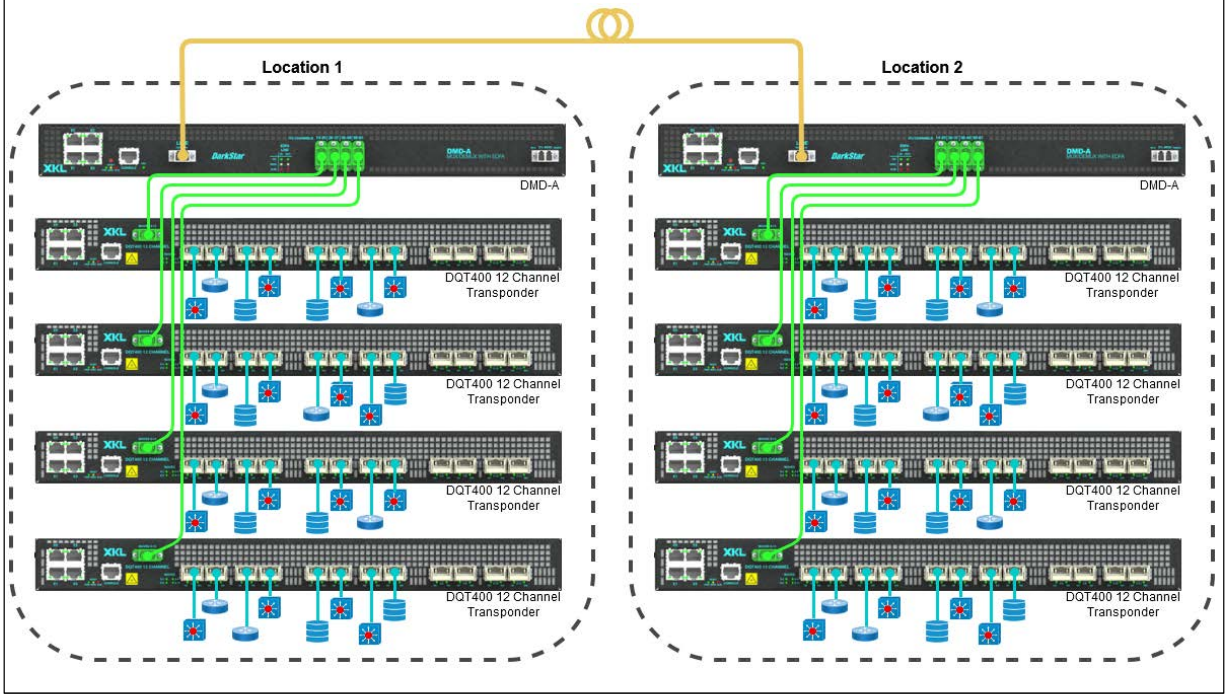

**FIGURE 1-21. DQT400-4 + DQT10 + DMD-A**

The DQT10 is a 36-channel model, where each green MPO cable contains 12 pairs of fibers. The DQT400-4 is a 4-channel model. In this example, three DQT400-4 systems connect to the DMD-A using a three 4-fiber-pair to 12-fiber-pair green MPO breakout-cable. There are 48 circuits, or channels, available between Location 1 and Location 2. This example shows 32 channels in use: 20 channels from the DQT10 (the DQT10 uses 4x10G QSFP+ client transceivers), plus 12 channels from the three DQT400-4's, where each channel is soft-configurable to100GE or 400GE (the DQT400-4 uses 100G QSFP28 or 400G QSFP-DD client transceivers). The DQT10 is also shown with 16 unused channels.

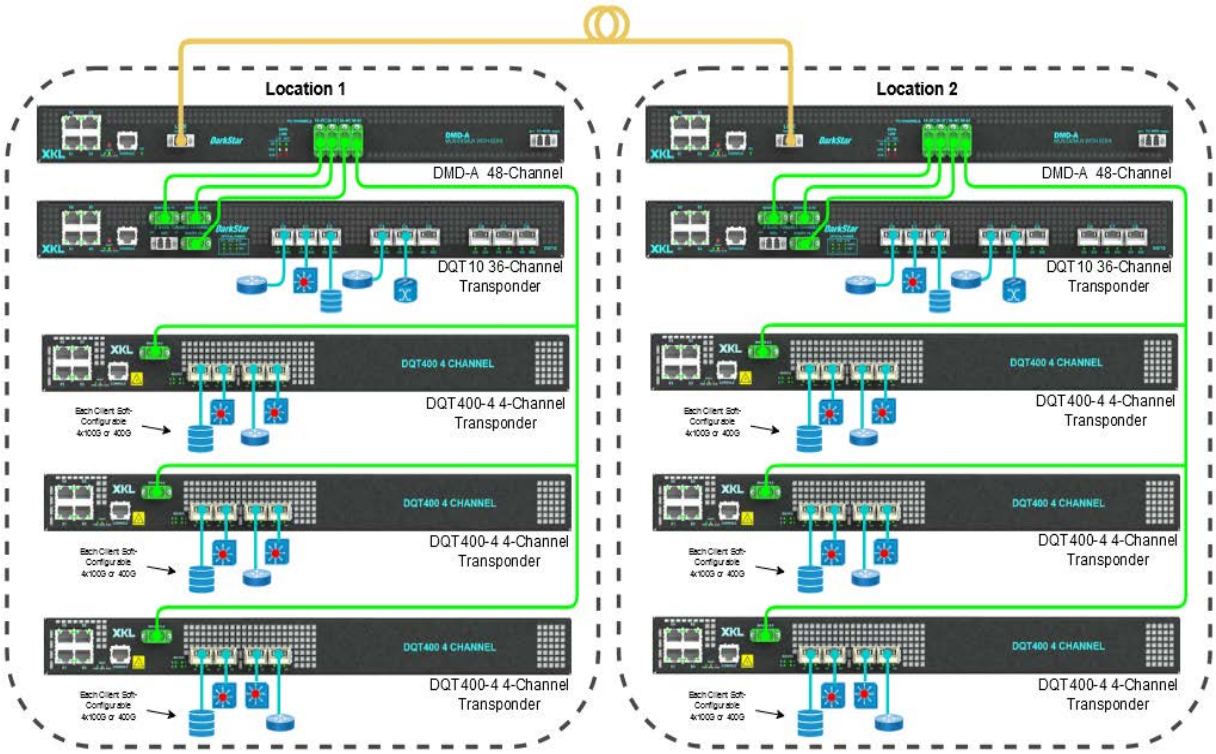

**FIGURE 1-22. Amplified Links Using DLA**

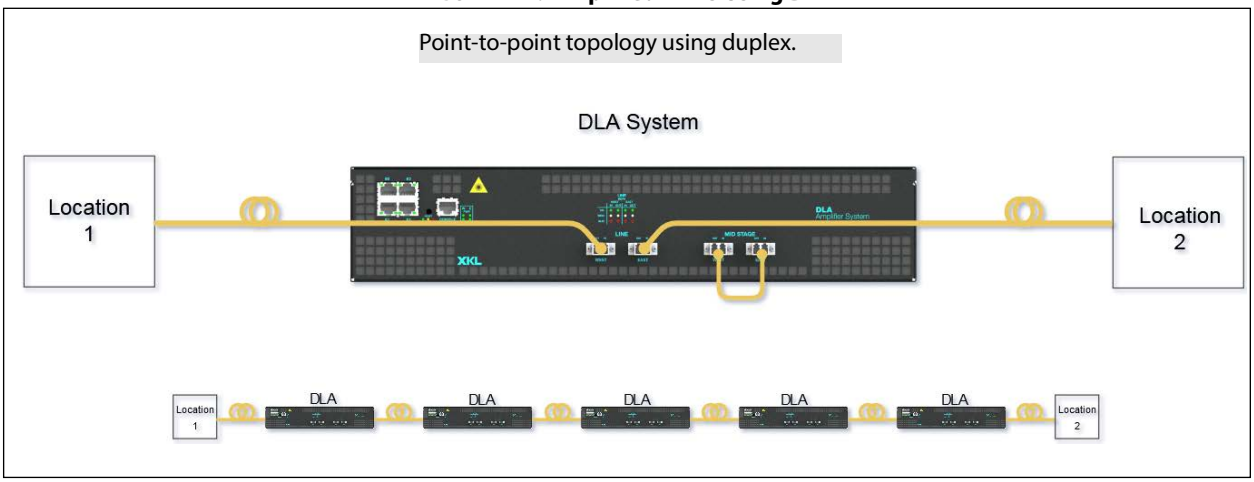


**FIGURE 1-23. DLA: Location 3 Connected to Mid-Stage Port**

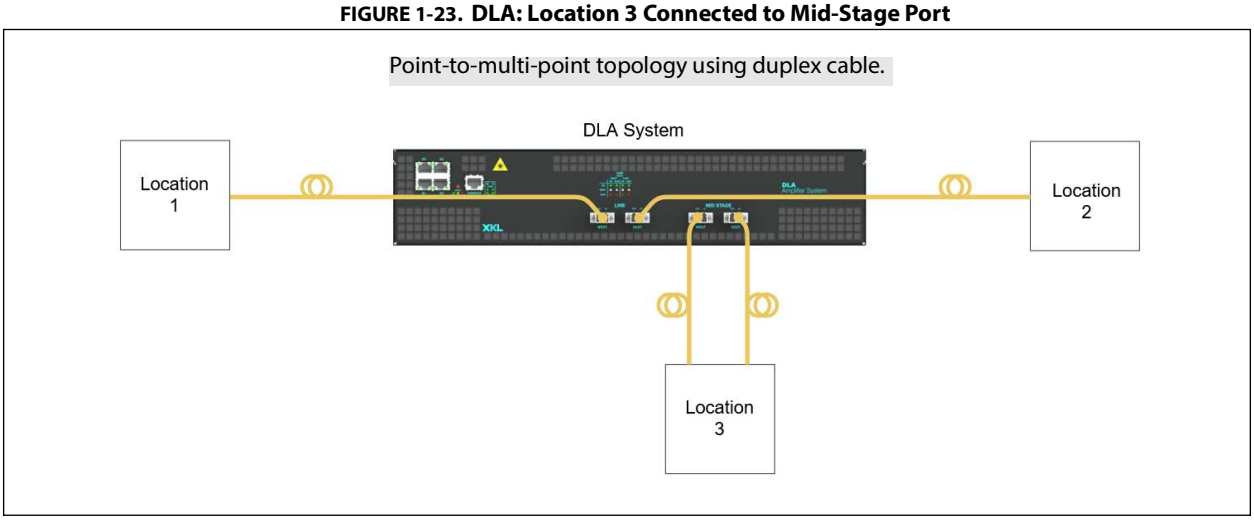

**FIGURE 1-24. SpectraPath Provisioner Ring using Express Ports**

Multiple SpectraPath Provisioners can be connected together to form a ring topology through the use of an express port. Configure one of the switch ports on each Provisioner system to act as an express port and pass traffic that is not added/dropped at a site. This example shows channels 20-25 being added/dropped at site 1, channel 25 is being added/dropped at site 2, and channels 20-24 being added/dropped at site 3.

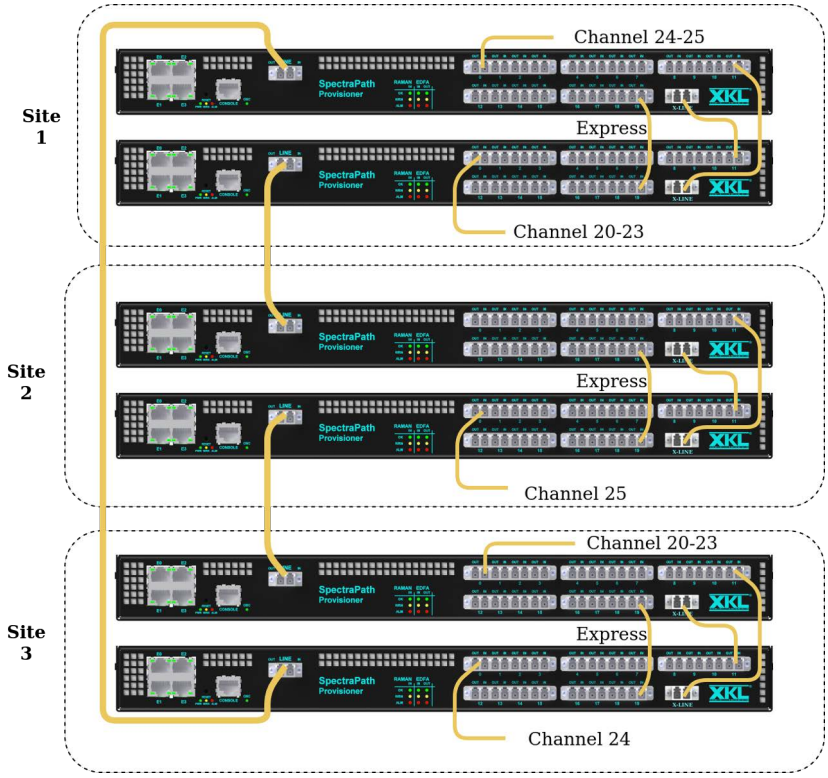

**FIGURE 1-25. DFM400-12 4 channel**

Point-to-point topology using 4 channels of the DFM400-12.

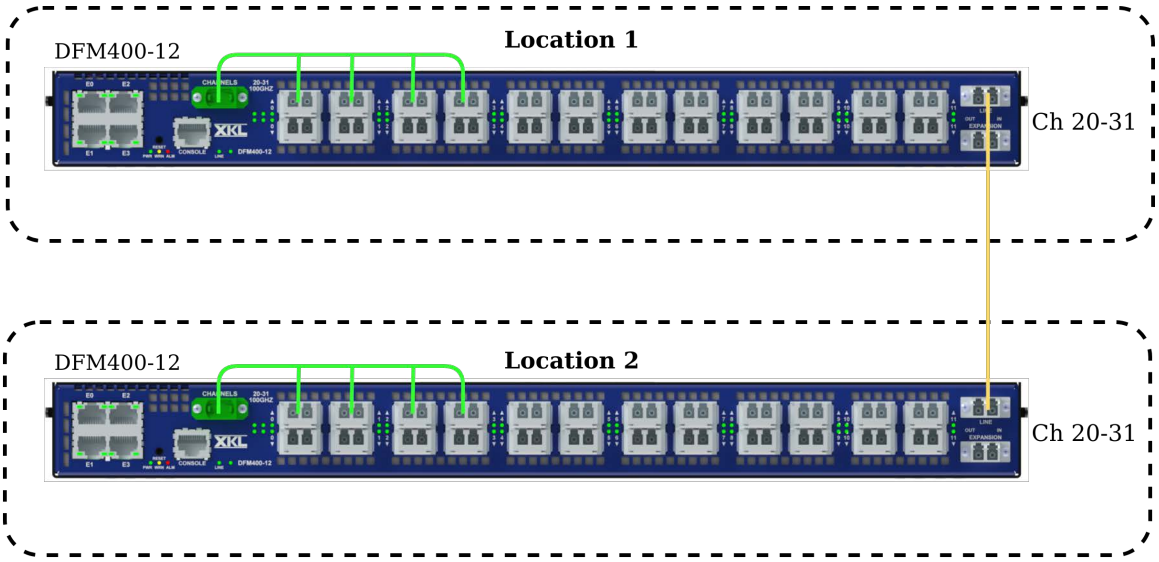

**FIGURE 1-26. DFX400-12 4 channel + Illuminator**

Point-to-point topology using 4 channels of the DFX400-12 and SpectraPath Illuminator.

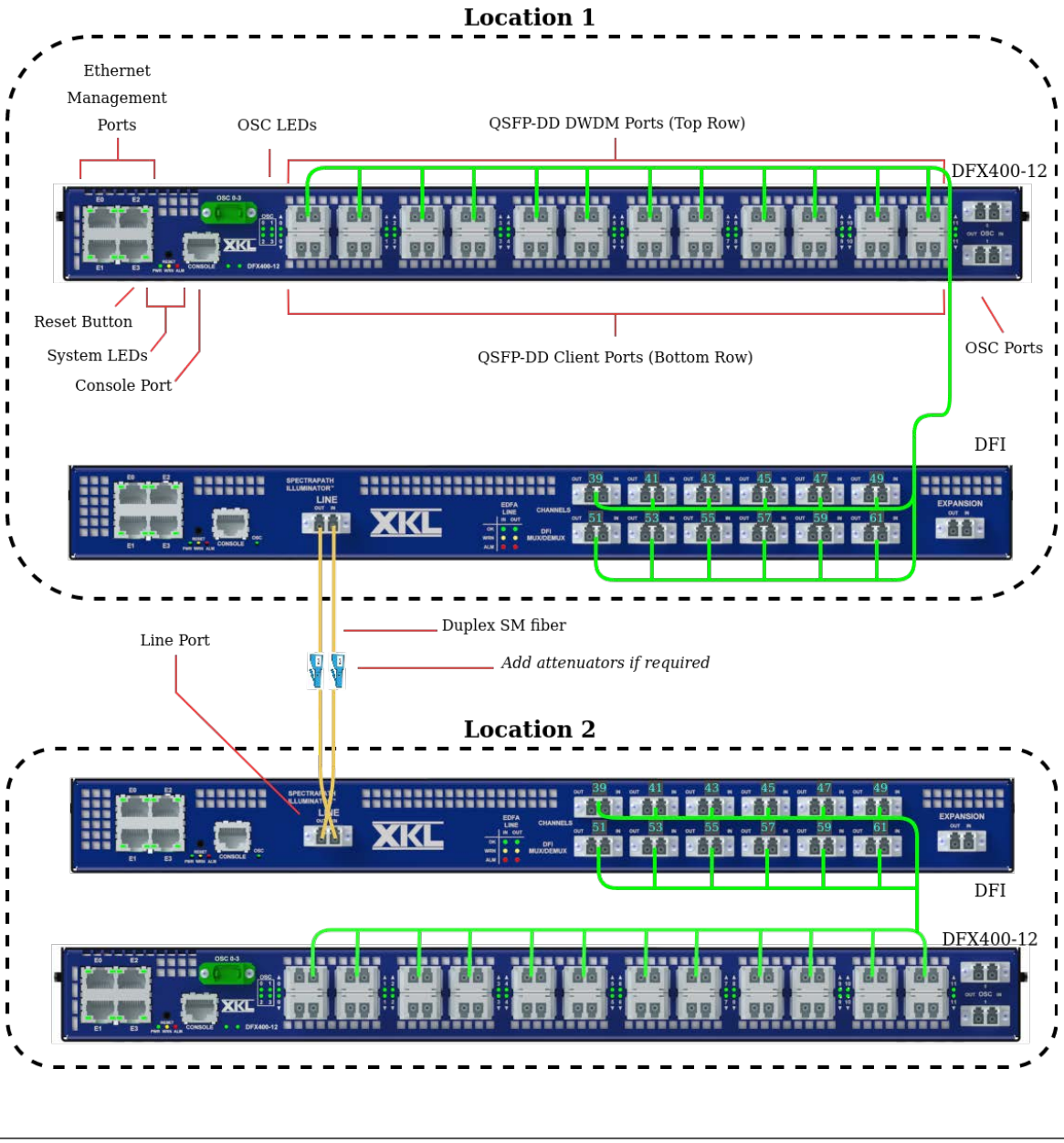

# 1.5 Key Benefits

As Table 1-5 shows, DarkStar optical systems provide a wide-ranging solution to many data transmission issues.

**TABLE 1-5. Key Benefits of DarkStar Systems**

| Feature | Benefit |
|---|---|
| Network & System | |
| Ease of deployment | Systems are delivered pre-configured for operation based upon the requirements and site installation details you provided, thereby facilitating and streamlining system deployment and network operation. |
| Seamless management | DarkStar products share hardware and software design elements, such as chassis design and software commands. |
| Latency | DarkStar networks offer low-latency performance for use in the most demanding, business-critical applications. |
| Integrated system | Networks are easier to manage than traditional line-card or cage-based solutions due to the flexible design and integrated components. |
| Hitless upgrades | DarkStar systems support hitless software updates. The customer can perform these updates in a scheduled maintenance window, but customer data is not interrupted during an operating system update. |
| Protection | DarkStar systems with the protection feature can be configured to provide protection over a backup line. In the event of a fiber cut, service is automatically switched to the backup line to minimize data loss. |
| Scalability | A DarkStar Mux/Demux (DMD) allows a solution of 40 channels, 48 channels, or 96 channels on a single fiber pair. |
| Extended transmission distances | The inclusion of amplifiers in a network may provide total transmission distances of up to 2000km, depending on your configuration. |
| Hardware | |
| Low power consumption | DarkStar products are designed to maximize power efficiency. Systems consume as low as 56W, typically. |
| Rackspace efficiency | Each system in the DarkStar family occupies only 1U of space in a standard equipment rack. |
| Redundant cooling | All powered DarkStar products include hot-swappable fan modules. |
| Redundant power | All powered DarkStar products include 1+1 redundant, hot-swappable power supply modules. |
| Software | |
| Intuitive interface | DarkStar systems offer router-like operation through an intuitive command-line interface familiar to any network administrator. |
| Field-upgradeable | DarkStar operating systems and gateware can be upgraded in the field. In addition, certain DarkStar models also include hardware upgrade capabilities. |
| Installer | An installer is provided to turn software updating into a seamless task. |
| Flash file system | An integrated flash file system facilitates data management: easy access, backups, simplified naming conventions, and the ability to boot any image, among other features. Files may be copied, uploaded, downloaded, and check-summed to ensure operational integrity. |

**TABLE 1-5. Key Benefits of DarkStar Systems**

| Feature | Benefit |
|---|---|
| Remote management | Systems can be accessed from anywhere. Moreover, any single DarkStar system can access all DarkStar systems in a network via the integrated OSC (optical service channel), collectively creating a remote system management network. |
| Remote and automated file configuration | System and configuration files can be hosted on a remote server to automate configuration of DarkStar systems. Use this feature to recover system settings upon reboot or to automatically provision multiple systems. |
| Management network services | The management network can be used to integrate network services with your system, including Simple Network Time Protocol (SNTP), Syslog, RADIUS, and Simple Network Management Protocol (SNMP) trap servers. |
| AAA support | Support for Authentication, Authorization, and Accounting (AAA) services provides increased network security. |

# 2

# Components

This chapter briefly describes DarkStar hardware components and introduces the DXMOS.

## 2.1 Power Supply Modules

DarkStar systems ship with two power supply modules. They can be both AC, both DC, or one of each. These modules operate in a 1+1 redundant configuration, so in the event that one power supply module fails, the system will operate on the other. Because power supply modules are hot-swappable, they can be replaced while the DarkStar system is running (as long as one power supply module is connected and running). The general procedure for managing power supply modules is the same for all systems. See Connect Power for details on power connections.



*Follow the instructions in Figure 5-8 to replace a power supply module.*

## 2.2 Fan Modules

DarkStar systems ship with two or three fan modules, depending on the DarkStar model. In the event of a fan module failure, the remaining fan modules are sufficient to adequately cool the system under normal operating conditions. Fan modules are hot-swappable and can be replaced and configured while the system is running. Each physical fan module contains two individual fan blowers.

DarkStar fan modules are variable-speed. When left in automatic control mode, fan speed is continuously adjusted to ensure that all temperature-critical components are maintained at or below individually specific control temperatures. If a fan module is removed (or fails), the speed of the other fans is automatically increased to compensate and ensure safe system operation.

Follow the instructions in Figure 5-9 to replace a fan module.

# 2.3 Optical Components

DarkStar systems include these optical interfaces, depending on the model:

**TABLE 2-1. Optical Modules in a DarkStar System**

| Module | Location |
|---|---|
| Line transceivers | DarkStar line transceivers (i.e., DWDM or simply “wave”), are located inside the system. In models with a top access panel, the waves are accessible via this panel. |
| Client transceivers | Client transceivers are accessible from the front panel of the DarkStar chassis. |
| OSC transceivers | OSC transceivers are located inside the system. In models with a top access panel, the OSC is accessible via this panel. This transceiver is multiplexed into the line port. It works in conjunction with the four external Ethernet ports on the front of the DarkStar system chassis, allowing for remote management of all DarkStar systems in the network. An OSC transceiver interface shares the same IP subnet as the adjacent OSC port on the remote DarkStar system. Additionally, DXMOS features, such as user accounts, DNS, access lists, RADIUS, AAA, OTDR and IP routes, can also be configured through the OSC. |
| Optical Mux and Demux filters | A Mux filter aggregates the individual line transceiver wavelengths, or waves, onto a single fiber. At the other end of the link, a Demux filter de-aggregates the transceiver wavelengths, enabling each wavelength to be connected to the individual line transceivers. |
| Wavelength Selective Switch | A SpectraPath system is shipped with up to two wavelength selective switches (WSS). All customer optical signals can be redirected to different switch ports and attenuated. The OSC signal is not managed by the WSS. |
| Optical Channel Monitor | A SpectraPath system is shipped with up to four optical channel monitors (OCM). All customer optical signals can be monitored. The OSC signal is not monitored by the OCM. |
| [Optional] Optical Time-Domain Reflectometer | DarkStar systems shipped with OSC transceivers can come equipped with an Optical Time-Domain Reflectometer (OTDR). OTDR is used to locate faults, bends or other disruptions in a fiber cable and immediately report the location via an SNMP trap or syslog event. |
| [Optional] Optical Protection Switch | A DarkStar system can be shipped with an optical protection switch (OPS). The mechanical switch is typically triggered if Loss of Signal is detected on the input line, moving customer optical signals from the primary line to the backup line. |
| [Optional] Amplifiers | A DarkStar system can be shipped with up to eight erbium doped fiber amplifiers (EDFA) or up to two Raman amplifiers. All customer optical signals are amplified. The OSC signal is not amplified by an EDFA. |
| [Optional] DGE-OCMs | A Darkstar system can be shipped with up to two dynamic gain equalizers and optical channel monitors (DGE-OCMs). All customer optical signals can be balanced and monitored. The OSC signal is not balanced or monitored by a DGE-OCM. |

# 2.4 Operating System DXMOS

DXMOS includes a Help feature for all commands. Type a question mark (?) at any system prompt or command line, or press "tab" at the end of incomplete commands.

## 2.4.1 DXMOS Modes

The DarkStar DXMOS has three modes that determine which commands are available:

- **disable** mode `>` allows all users to display limited information about a system. Disable-mode users can only view the state of the machine, and cannot change its operational state or configuration.
- **enable** mode `#` allows users with appropriate permission to reconfigure some aspects of a system and display all information about the system. Enable mode requires a password and allows users to access a configure sub-mode to configure the system and perform system maintenance.
- **configure** mode `CONF#` is a sub-mode of enable mode, in that all commands are accessible. Configure mode is particularly important, as it is used to set up and manage DarkStar systems and can be used to effect changes that impact customer traffic. The `configure` command level (indicated by the `CONF#` prompt) includes sub-level commands to configure specific features, each identified by its own prompt. For example, the `CONF-FAN[n]# fan` command configures a hot-swap fan module.

Table 2-2 summarizes the prompts.

**TABLE 2-2. Command Prompts**

| Prompt Format | Meaning |
|---|---|
| `>` | Default prompt for top level (disable mode) commands. |
| `#` | Default prompt for enable mode commands. |
| `CONF#` | Default prompt for configure commands. |

Table 2-3 shows the various ways of moving between prompts. For example, to move from disable mode `>` to enable mode `#`, enter "enable" at the disable prompt (`>` enable→`#`).

**TABLE 2-3. Moving Between Disable, Enable, and Configure Modes**

| Prompt/Command | Resulting Prompt | Resulting Mode |
|---|---|---|
| `> enable` | `#` | enable |
| `# configure` | `CONF#` | configure |
| `# disable` | `>` | disable |
| `# exit` | `>` | disable |
| `CONF# end` | `#` | enable |
| `CONF# router rip` | `CONF-RIP#` | router RIP configuration* |
| * See the Command Reference for a complete listing of the configuration sub-level modes and their prompts. | | |



*At any sub level, the `exit` command returns to the previous level, while `end` returns to enable mode.*

### 2.4.2 Terminal Pager

For commands that support text paging. When enabled, the DXMOS terminal pager prints a set number of output lines per page. Pressing the space key displays the next page of console output. The length of the page can be configured using the `terminal pager` command in configure mode. By default, the terminal pager is disabled. If the terminal pager feature is enabled (i.e., set to non zero), it has no effect on the display of help output (? or tab).

### 2.4.3 Syntax Format

This guide uses the following conventions to represent DXMOS command-line syntax.

**TABLE 2-4. Conventions for DXMOS Syntax**

| Format | Meaning |
|---|---|
| `Machine-generated text` | Command line prompt or other machine-generated command line interface (CLI) text.<br>For example: `localhost>` |
| **boldface** font | Command line information that a user must enter, including commands, command options, and keywords.<br>For example: **show amplifier** |
| *italic* font | Arguments that a user supplies, such as free-form input text, passwords, numbers, etc.<br>For example: **snmp-server community** *string* |
| **{}** | Curly braces denote required keywords and arguments. The vertical bar(s) between keywords and arguments denotes "or," and means one of multiple terms must be chosen as an option.<br>For example: **{client\|osc\|trunk}** |
| [] | Square brackets denote optional keywords or arguments.<br>For example: [no] **snmp-server enable traps** |

### 2.4.4 Abbreviations and Shortcuts

Commands may be abbreviated if the command is unique in the current mode. For example, `show connections` can be shortened to `sh conn`, but cannot be shortened to `s con` because there is more than one possible completion. The following keyboard shortcuts are available in DXMOS:

**TABLE 2-5. DXMOS Keyboard Shortcuts**

| Shortcut | Action |
|---|---|
| CTRL+A | Go to the beginning of line. |
| CTRL+B | Go back one character. |
| CTRL+C | Cancel the current command line input. |
| CTRL+D | Delete the current character. |
| CTRL+E | Go to the end of line. |
| CTRL+F | Go forward one character. |
| CTRL+K | Delete all characters from the current cursor position to the end of the command line. |
| CTRL+N, ↓ | Scroll forward through the command history. |
| CTRL+P, ↑ | Scroll backward through the command history. |
| CTRL+R | Redraw the current command input (useful for restoring what was typed if the system writes output to the console while you enter a command). |
| CTRL+U | Clear the current command line contents and provide a new command prompt. |
| CTRL+V | Disregard any special meaning of the character following. The CLI already disregards most special characters and this shortcut is rarely required. |
| CTRL+Z | Discard the current command line and exit configure mode (equivalent to typing `end` at a configure mode prompt). |
| <Tab> key or question mark key (?) | Complete partially entered unique keyword. If more than one possible completion exists, it will display a list of choices. |
| ; or ! | Ignore rest of line. Use as an initial character to insert comments in the command line. |

# 2.5 Command Line Help

Available from any command mode or command line, the tab key <Tab> or question mark key (?) enable you to determine context-specific commands, keywords and arguments, as well as to auto-fill partial command-line strings. Although the following examples use <Tab>, you can also use "?," as the results are the same.

**Note:** In these examples, an underscore "_" represents the command-line text cursor, and the spot where you press <Tab>.

One of the commands from Disable Mode (>) is the `show` command. Typing "s" and immediately pressing <Tab> will complete its string.

`>` **s_** **Result:** `>` **show _**

For auto-fill, there should be no space between the letter or partial command string and the text cursor when pressing <Tab>. If the letter or partial command string matches more than one command, those optional commands will be displayed. In this example, `show` is the only available command beginning with "s."

In the result above, auto-fill leaves a single space between the completed string and the text cursor. Depending on the initial command string, pressing <Tab> again may yield a list of added command options. For this example, we show the partial list that appears upon pressing <Tab>:

**Result:**
```
Information to be displayed, one of the following:
       arp
       bert
       calendar
       chassis
       clock
       connections
       debug
       edfa
       environment
```

From this list, we want `environment` to be the next string in the command line. However, there are two options beginning with an "e"— `environment` and `edfa`. Typing the first letter "e" and pressing <Tab> in this case only narrows the list down to string matches beginning with "e":

`>` **show e_** **Result:**
```
Information to be displayed, one of the following:
       edfa
       environment
```

For a quicker approach, simply type enough of the desired string to differentiate it from all others having the same beginning spelling. Here, we type the partial string "en" and press <Tab> to get `environment`.

`>` **show en_** **Result:** `>` **show environment _**

Additional tab strikes may provide more detail, keywords or arguments from which to choose. If not, the carriage return <cr> symbol will be the only option left. In this example, pressing <Tab> yields added details from which to choose.

**Result:**
```
specific environmental details one of the following:
       all
       fans
       logging
       power
       temp
       <cr>
```

Typing "p" for `power` and pressing <Tab> auto-fills the chosen string. The desired command line, as shown below, is now complete.

**Result: > show environment power verbose _**

In this example, pressing <Tab> yet again will yield no further command-line options other than <cr>, which signals that you must press Enter to execute the command.

# 3

# Rack-Mounting the System

## 3.1 Before you begin

The DarkStar system is shipped complete and ready to run when power is applied. You do not need to open the chassis to install or configure line cards, transceivers, fan, or power supply modules.

**Note:** You can rack-mount your XKL system at any point during setup.

## 3.2 Installing a DarkStar System in a 4-Post Rack (19 in.)

**Copper and fiber cables connect to the front of the system; power connections and fan outlets are at the back.**

A rack-mount kit is included for a 19-inch 4-post rack. Identify the rail, bracket, and fastener part numbers from the shipping documentation.

**Important:** Provide slack to any cables attached to the DarkStar system, such as power, management, or fiber optic cables.

## 3.3 Four-Post Racking Instructions Overview

The general instructions provided here apply to a 19-inch, 4-post rack for a one rack (1U) or two rack (2U) unit configuration.

Your product ships with an accessory package that includes the rail, bracket, and fasteners.

| | |
|---|---|
|  | *The system has rails that slide to provide access to the hatch on the top of the chassis. This hatch is used to hot-swap line transceiver (or OSC transceiver on certain systems), as shown in* Chapter 8 - Troubleshooting. |

Review Table 3-1 for a list of components for the 4-post rack.

**FIGURE 3-1. Rail Assembly Full View**

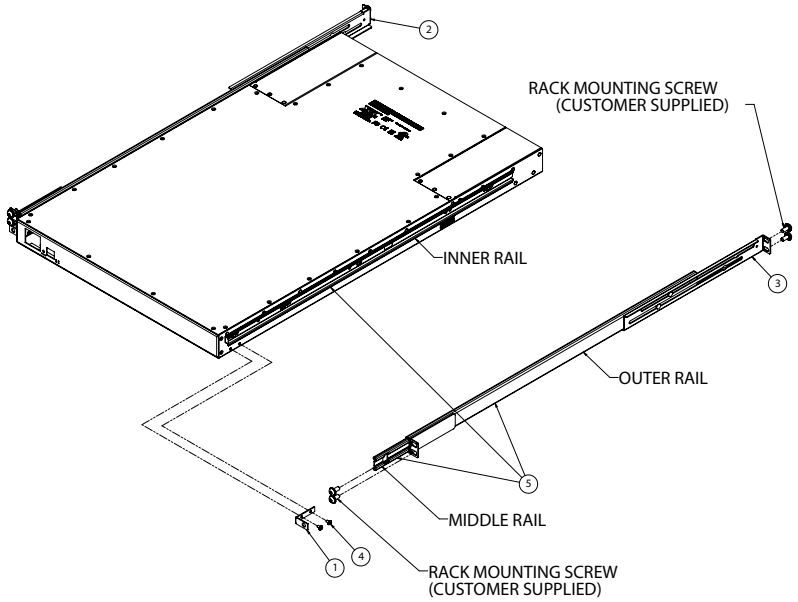


**TABLE 3-1. Parts List for 19-inch, 4-Post Rack**

| Item No. | Quantity | Description |
|---|---|---|
| 1 | 2 | L-Bracket |
| 2 | 1 | Slide Bracket, Left |
| 3 | 1 | Slide Bracket, Right |
| 4 | 4 | M3 Screw |
| 5 | 2 | Slide Rail (Outer, Middle, Inner) |

### 3.3.1 Four-Post Rack Installation Steps

1. Locate the two mounting Slide Rails and associated screws in the accessory package. Each slide rail is comprised of an outer rail, middle rail, and an inner rail that comes pre-installed on the chassis. Figure 3-2 shows a fully retracted slide rail, as well as a slide rail having its inner rail and middle rail partially extended.

**FIGURE 3-2. Slide Rail: Retracted View and Extended View**

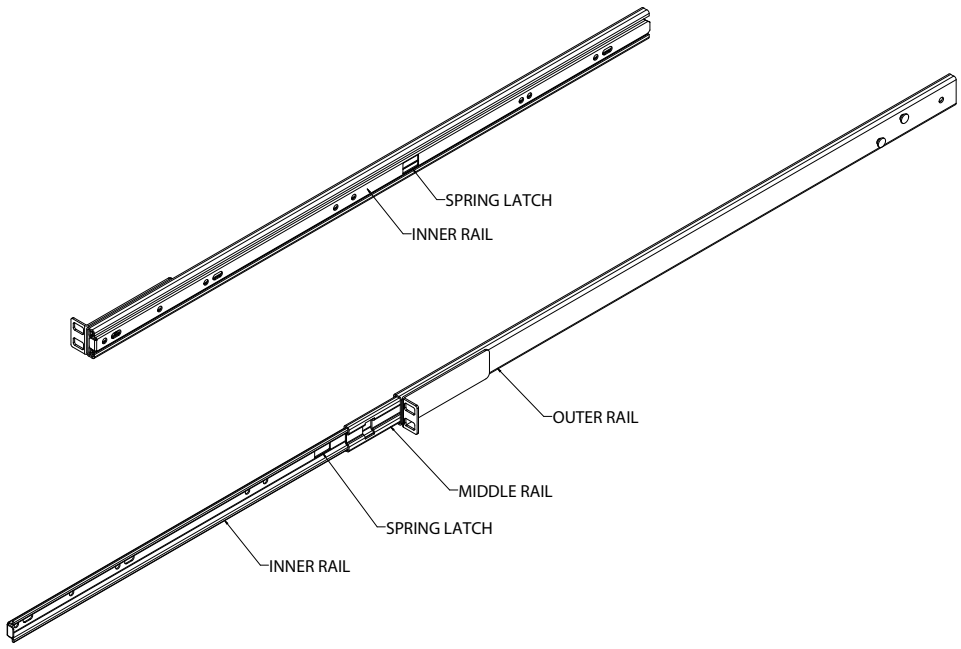


**4.** Fasten the locking L-Brackets with two M3 screws on each side of the chassis, as shown in Figure 3-3.

**FIGURE 3-3. Fastening the L-Brackets to the Chassis**

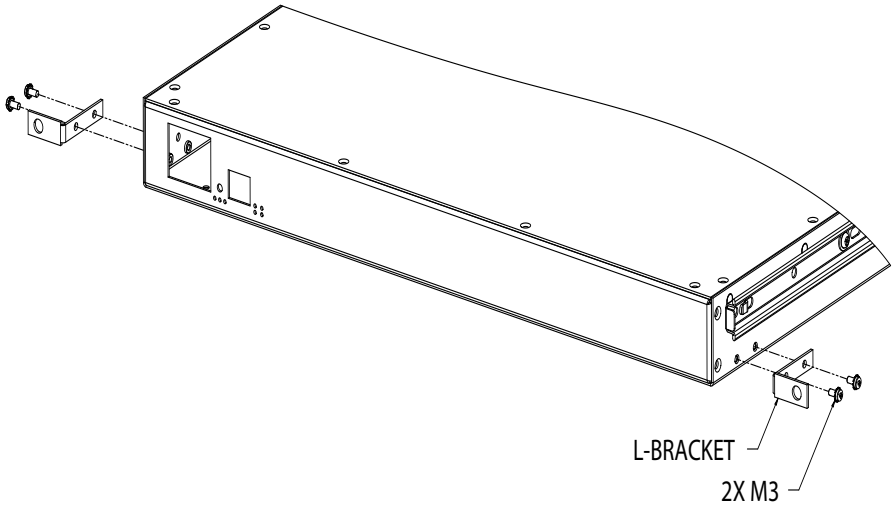


**5.** Attach the Slide Brackets onto the outer rails. Note that there is a left slide bracket and a right slide bracket. To differentiate between the two, properly orient a bracket so that its mounting flange is pointing away from the outer rail, and the bracket's heavier lip is pointing towards the outer rail. Figure 3-4 depicts a right slide bracket.

**Note:** These slide brackets are extendable to adjust to the depth of different racks.

**FIGURE 3-4. Adjusting Slide Bracket to Outer Rail**

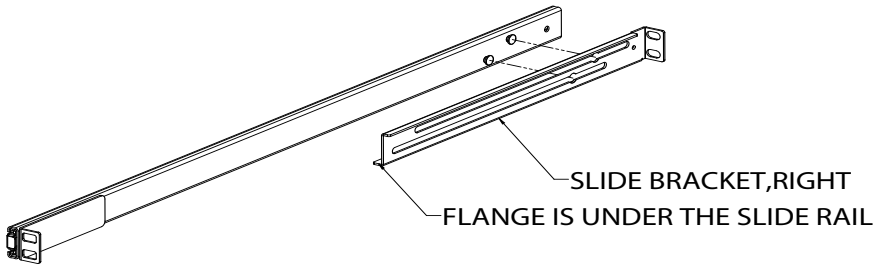


**6.** If not already done, push the middle rail back to its fully-retracted position (inside the outer rail). Now, position the outer rail with its flange holes aligned with the middle and upper holes of the 1U hole-set of the rack posts. Install the two outer rails (with their attached slide brackets) to the 4-post rack, keeping the sides level and parallel. See Figure 3-5.

**FIGURE 3-5. Attaching Outer Rails to 4-Post Rack**

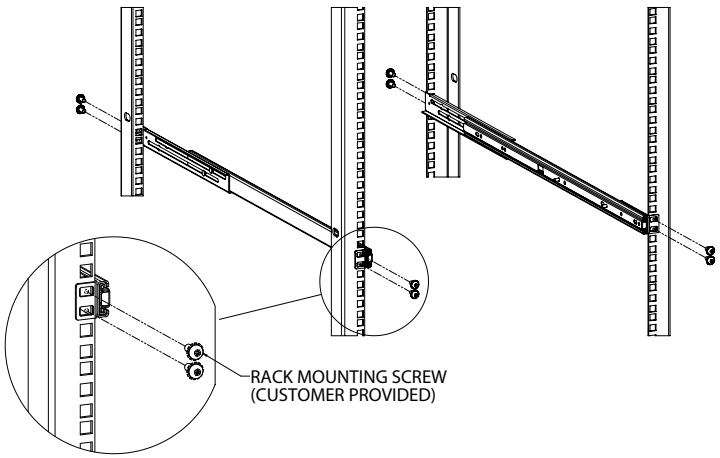


**7.** Now pull the middle rails out from the outer rails until they latch into the fully-extended and locked position, as shown in Figure 3-6.

**FIGURE 3-6. Extending the Middle Rails Out**

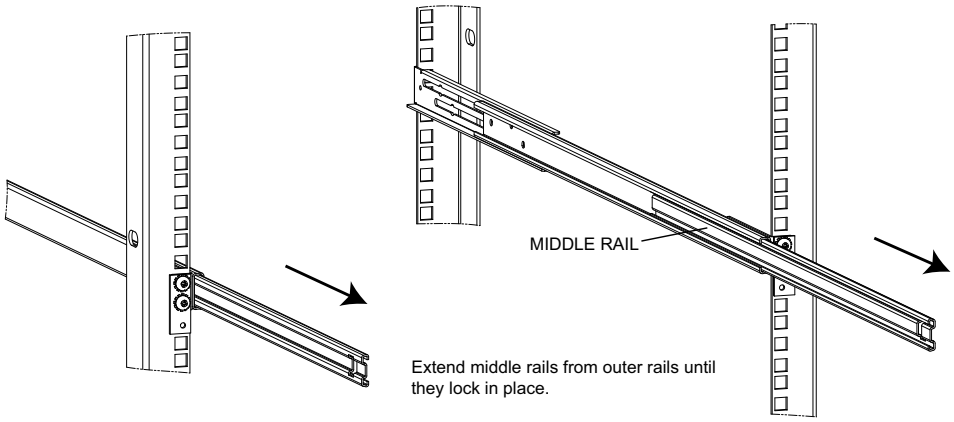


**8.** Lift the chassis and match the inner rails on the chassis to the extended middle rails. Slide the chassis into the rack, as depicted in Figure 3-7, until it clicks.

**Recommended:** Two persons for this step.

**FIGURE 3-7. Sliding Chassis Into Middle Rail**

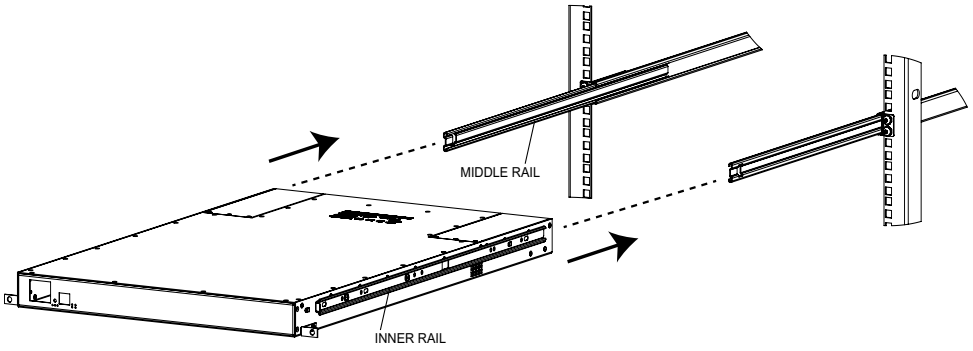


**10.** After the chassis is completely pushed into the 4-post rack, secure the Lock Screws into the hole that connects the L-Brackets to the rails as shown in Figure 3-8.

**FIGURE 3-8. Installing Lock Screws**

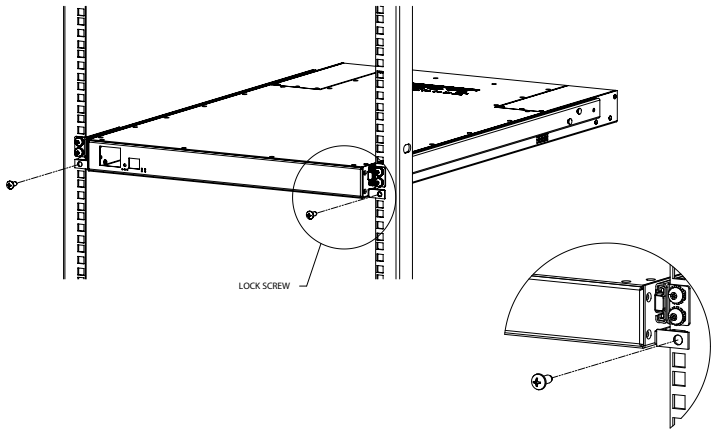


## 3.4 Installing a DarkStar System in a 2-Post Rack (19 in. and 23 in.)

**Copper and fiber cables connect to the front of the system; power connections and fan outlets are at the back.**

A rack-mount kit is included for either a 19-inch or 23-inch 2-post rack. Identify the rail, bracket, and fastener part numbers from the shipping documentation.

**Important:** Provide slack to any cables attached to the DarkStar system, such as power, management, or fiber optic cables.

## 3.5 Two-Post Racking Instructions Overview

The general instructions provided here apply to both a 19-inch and 23-inch, 2-post rack for a one rack (1U) or two rack (2U) unit configuration. The installation figures below use the 23-inch rack as the reference example, but the installation process is the same between the 19-inch and 23-inch racks with the exception of Adapter Plates used in the 23-inch rack.

Your product ships with an accessory package that includes the rail, bracket, and fasteners.

| | |
|---|---|
|  | *The system has rails that slide to provide access to the hatch on the top of the chassis. This hatch is used to hot-swap line transceiver (or OSC transceiver on certain systems), as shown in* Chapter 8 - Troubleshooting. |

Review Table 3-2 for a list of components for the 2-post rack.

**FIGURE 3-9. Fully Assembled 23-inch 2-Post Rack**

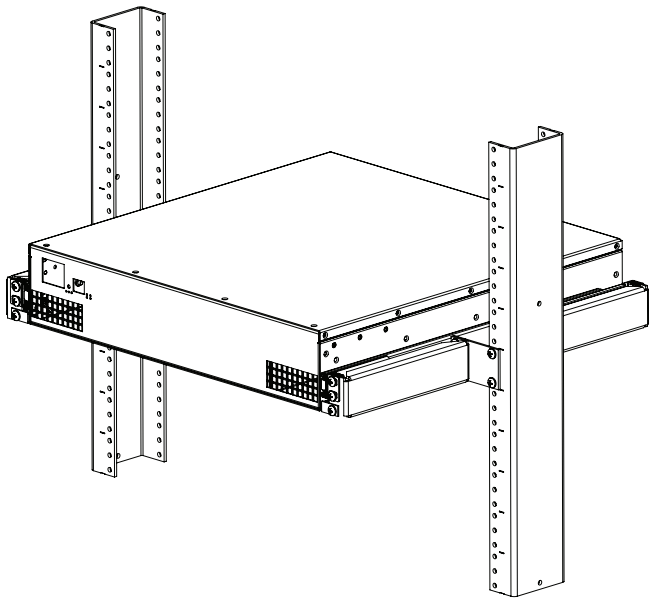

**TABLE 3-2. Parts List for 19-inch and 23-inch 2-Post Rack**

| Item No. | Quantity | Description |
|---|---|---|
| 1 | 2 | L-Bracket |
| 2 | 1 | Slide Bracket, Left |
| 3 | 1 | Slide Bracket, Right |
| 4 | 4 | Extension Bracket |
| 5 | 4 | M3 Screw |
| 6 | 10 (19 in. Rack)<br>18 (23 in. Rack) | 12-24 Screw |
| 7 | 12 | 12-24 Cage Nut |
| 8 | 2 | Slide Rail |
| 9 | 4 | Adapter Plate (23 in. Rack only) |

### 3.5.1 Two-Post Rack Installation Steps

**1.** Mount the bracket assembly to the rack posts in the rack space desired using 8 customer-supplied screws. Tighten securely.

**Note:** The Adapter Plates are only used on the 23-inch Rack Mount.

**FIGURE 3-10. Bracket Assembly Installed onto Rack Posts**

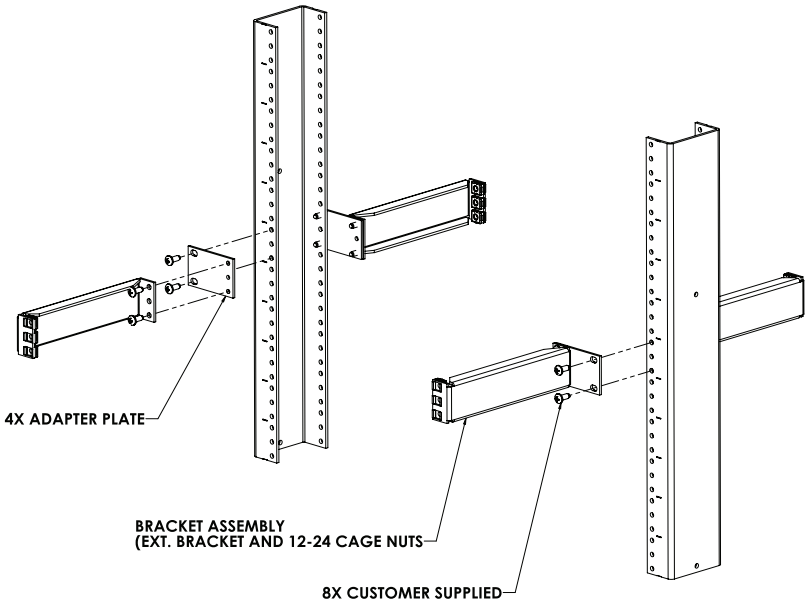


**2.** Mount the middle and outer slide rails and the Slide Brackets to the Extension Brackets using 8x 12-24 Screws.

**FIGURE 3-11. Mounting Middle and Outer Slide Rails**

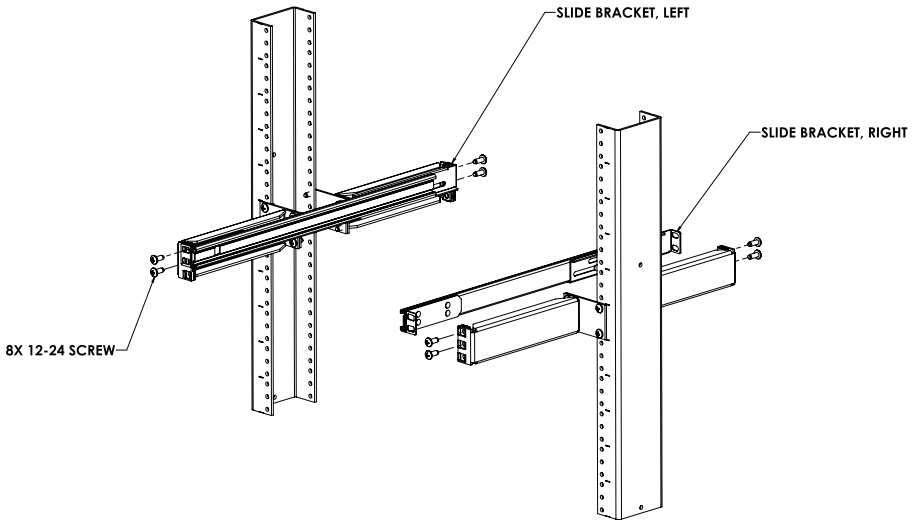

**3. Note:** The inner rails (part of Slide Rail) are pre-installed.

Position the L-Bracket at the front of the chassis and secure with 2x M3 Screws on each side.

**FIGURE 3-12. Installing Slide Rail**

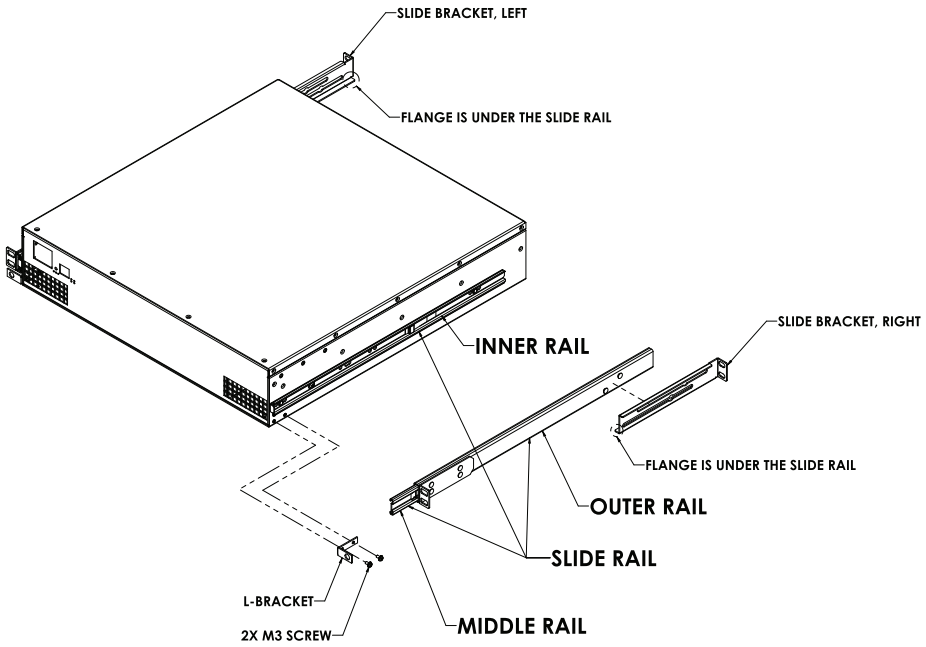


**4.** Pull the middle rail out of the outer rail until it latches in the extended position.

Place the chassis into the rack by sliding each inner rail into the extended middle rail. Slide the chassis back along the rails until reaching a stop.

Depress the spring latch on each side to bypass the stop until the chassis continues to its fully retracted position.

**FIGURE 3-13. Installing Chassis onto 2-Post Rack**

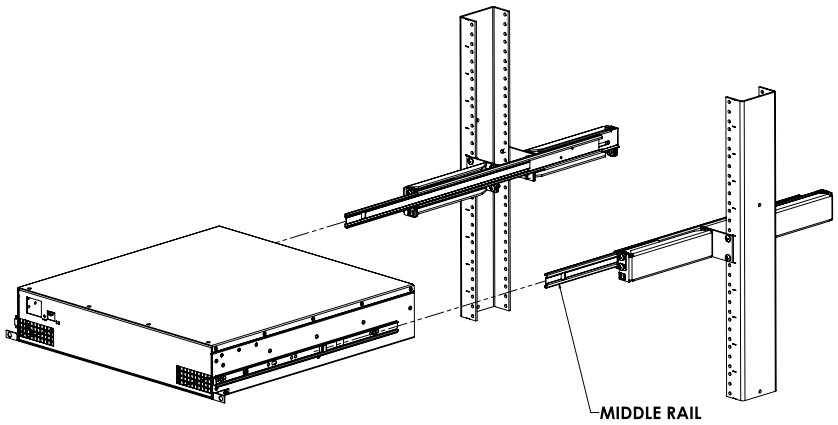


**5.** Install a Lock Screw on both Bracket Extensions.

**FIGURE 3-14. Installing the Lock Screws**

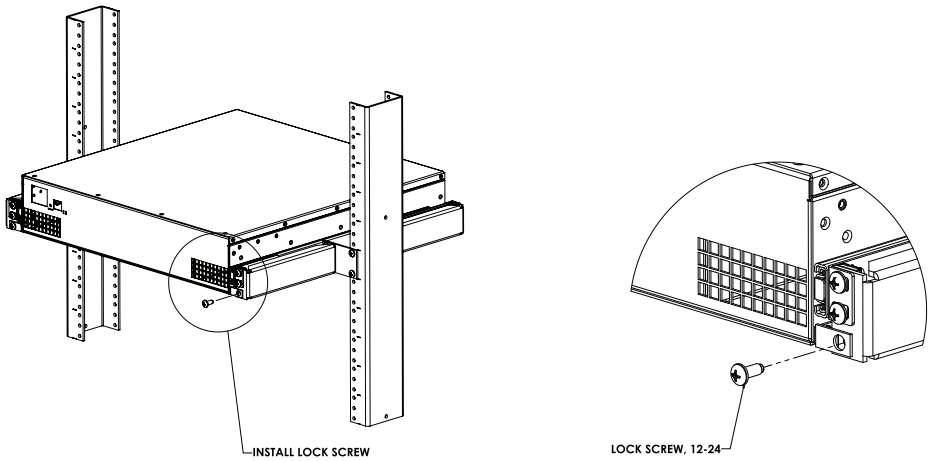

# 3.6 2U Front Mounting Kit Instructions

Attach the brackets to the chassis as illustrated. Use four screws to mount the chassis to the rails.

Review Table 3-3 for a list of components for the 2U Front Mounting Kit.

**TABLE 3-3. Parts List for 2U Front Mounting Kit**

| Item No. | Quantity | Description |
|---|---|---|
| 1 | 2 | 19 in. 2U Front Mount Bracket |
| 2 | 12 | M4 Screw |
| 3 | 4 | 6-32 Screw |
| 4 | 2 | 2U Front Mount Handle |

**FIGURE 3-15. Installing the 2U Front Mounting Kit onto Chassis**

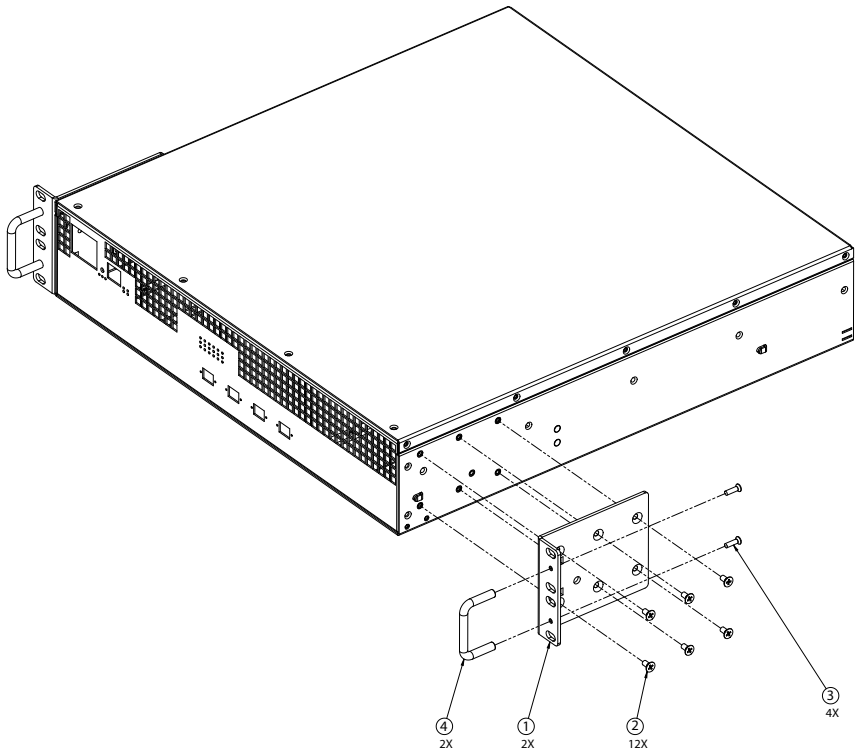

# 4

# Setup and Management Configuration

Here you will learn how to connect a console terminal, power up, and then quickly configure a DarkStar system. Examples show some common configurations and are intended only to get a DarkStar system up and running. Consult the *Command Reference* on the XKL website for more complete configuration information.

## 4.1 Connect the Console Terminal

Figure 4-1 shows a console terminal connected to a DarkStar system.

**FIGURE 4-1. Console Terminal Connected to the DMD-A**




The console serial port is a minimal RS-232 Data Terminal Equipment (DTE) configuration. Wiring for the 8-pin modular jack (RJ-45) that connects the RS-232 connector to the console is illustrated in Figure 4-2. A console cable is provided with all DarkStar systems.

**FIGURE 4-2. RJ-45 Modular Jack: Pinout View**

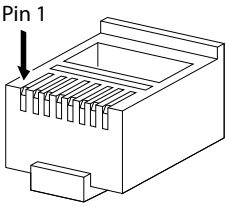

Table 4-1 describes the pinout configuration for the RJ-45 modular jack.

**TABLE 4-1. RJ-45 Modular Jack: Pinout Configuration**

| Pin | Signal |
|---|---|
| 1 | No connection |
| 2 | No connection |
| 3 | TxD |
| 4 | Gnd |
| 5 | No connection |
| 6 | RxD |
| 7 | No connection |
| 8 | No connection |

To establish access, connect the RS-232 port on a console terminal to the RJ-45 console port on the front of the DarkStar system. The console line supports 9600-8N1 communication:

- 9600 baud
- 8 bits per character
- no parity
- 1 stop bit

## 4.2 Connect Power

Connect to the appropriate power source. The DarkStar system comes with two power supply modules. These modules can be both AC, both DC, or one of each.

The following power combinations are supported:

- Two 100-240VAC
- Two 48VDC
- One 100-240VAC and one 48VDC

The modules operate in a 1+1 redundant configuration, so in the event that one power supply module fails, the system can continue to operate normally on the other.

Because power supply modules are hot-swappable, they can be replaced while the DarkStar system is running (as long as one power supply module is connected and running). The general procedure for managing power supply modules is the same for all systems. Follow the instructions in Figure 5-8 to replace a power supply module.



**Before connecting or disconnecting an installed power supply module, make sure it is firmly seated in the DarkStar system.**

### AC Power

DarkStar products with AC power require no special wiring and can be connected to a standard outlet with 100-240VAC power using the included power cords.

### DC Power

DC power connection may be a plug-in connector or an input terminal, as illustrated in Figure 4-3.

**FIGURE 4-3. DC Power Connections**

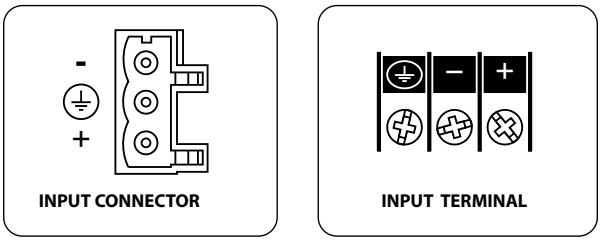


To connect to the DC input terminal, 12-16 AWG (American Wire Gauge) stranded wire is recommended; 14 AWG wire is optimal for its size and flexibility.

Table 4-2 shows the DC Power Connection Matrix.

**TABLE 4-2. DarkStar DC Power Connection Matrix**

| Reference | -48V Rail | +48V Rail |
|---|---|---|
| - | -48V | +48V RTN |
| ⏚ | GND | GND |
| + | -48V RTN | +48V |



- **Before connecting DC power, turn off the 48V DC supply. Failure to do so could result in serious personal injury or system damage.**
- **When connecting wires to the Input Terminal, the ground connector GND must be connected first, and disconnected last.**

### 4.2.1 System Boot

The DarkStar system boots as soon as you connect either of the two power supply modules. XKL designs these systems for continuous operation—there is no power on/off switch. Instead, there is a front reset button, shown in Figure 4-4, which reloads software and gateware without cycling power.

Front-panel LEDs display system status and can help to monitor this process. See Monitoring the DarkStar System for a comprehensive table of LED patterns and their meanings.

When you power up the system, it performs the following steps:

1. MiniBoot, a lightweight boot loader, loads from the startup gateware and executes a larger, more functional boot loader, Boot, from the startup boot location in the startup flash memory.
2. Boot attempts to obtain configuration information in the following order. Otherwise, DXMOS is started without configuration information, and DarkStar Factory Default settings are applied.
   - Boot configures from the flash configuration file (dxmos/config.dat) if the file exists.
   - If the file contains explicit commands to boot via DHCP (`boot host dhcp`), then Boot attempts to obtain a configuration file via DHCP and TFTP.
   - If the attempt to configure via DHCP/TFTP fails, Boot follows the other commands in the flash configuration file.
   - Otherwise, if there is no flash configuration file, Boot will start DXMOS without a configuration file, using the default file, /dxmos/dxmos.exe.
3. After a delay (10 seconds by default), Boot loads DXMOS from the image location specified in the configuration file or from the default file, /dxmos/dxmos.exe. Wait for DXMOS to load.

**>>>You are now ready to configure your system<<<**

### 4.2.2 Boot and Recovery

From time-to-time, you may have to reboot the system by pressing the front reset button, as shown in Figure 4-4. This action will result in reloading the system's software and gateware without cycling power (i.e., power turned off, then turned on). Pressing this reset button, commonly referred to as a warm reload, should only be used in two instances: 1) when the computer malfunctions, and 2) when installing new gateware in the processor after the gateware has been written to the system. Generally speaking, however, new gateware installation will not require the use of this reset button.

**Note:** Only the DSM10 family of products feature the side reset button.

**FIGURE 4-4. DarkStar Hardware Reset Button**

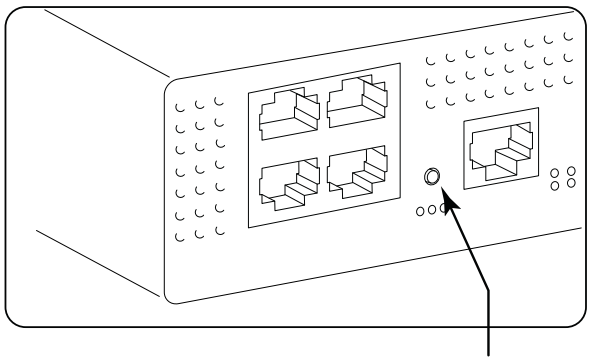

The following tables summarize events that trigger boot and recovery scenarios, and their effects on the DarkStar system.

**TABLE 4-3. Boot & Recover Scenarios**

| Event | Power Cycle | Gateware Reload | Software Reload | Factory Recovery Mode |
|---|---|---|---|---|
| Front button push and release | no | yes | yes | no |
| Front button push and hold | no | yes | yes | yes; alternates between factory gateware and startup gateware. Loads whatever is different from the previous gateware load. |
| DXMOS `reboot` command | no | no | yes | no |
| DXMOS `reload` command | no | yes | yes | no |
| Power cycle (disconnecting both power supply modules) | yes | yes | yes | no |
| DXMOS software fault | no | no | yes | no |
| Watchdog timeout | no | yes | yes | yes, only after back-to-back watchdog timeouts in which DXMOS fails to run. |
| Failure to load startup gateware | no | yes | yes | yes |

- "Push and release" means pushing the button and immediately releasing it.
- "Push and hold" means pushing the button and holding it in for at least 3 seconds.
- Front button push and release, or DXMOS `reboot` command, is suggested for software reboots.
- Hardware reset button on the front of DarkStar systems, illustrated in Figure 4-4.
- Gateware reloads may impact OSC and Ethernet link status and produce OSC loss of signal (LOS).

**TABLE 4-4. Different Types of Reboot**

| Result | Action |
|---|---|
| To reset the software only | Use the DXMOS `reboot` command. If the running configuration is identical to the startup configuration, software reset maintains power and the state of customer traffic. |
| To warm reload (no power cycle) | Press and immediately release the front reset button. If the running configuration is identical to the startup configuration, warm reload reloads the system gateware and software, and maintains power and the state of all transport interfaces. Warm reload is the hardware equivalent of the DXMOS `reload` command. |
| To cold reload (with a power cycle) | Disconnect both power cords for an external power cycle. |
| To boot the system using factory default image | Press and hold the front reset button for three seconds. The system status LEDs (green, amber, and red) on the front panel will light up once the button is held for 3 seconds, then flash the green LED upon release as the factory image is loaded.<br>Note that booting from the factory default image will drop the console into recovery mode. While in recovery mode, the customer traffic state is maintained. However, customer traffic can be interrupted exiting from recovery mode if the loaded configuration file differs from the current hardware state. |
| To determine whether a power cycle has occurred since the last reload, run the `show version` command. If the previous reload was a power cycle, `Last reload due to internal power cycle` displays. Likewise, the message will indicate if it was an external power cycle. When managing a DarkStar system remotely, this information may be helpful in determining the cause of a power cycle. | |

## Important:



**Cycling power disrupts customer traffic. It should only be done if a system has crashed or if you want to do a hard reset of all hardware.**



*If changes are made to* `running-config` *and the DarkStar system reloads without saving changes to* `startup-config`*, changes made to the* `running-config` *will be lost. As a result, when the system reboots, the previous* `startup-config` *will take effect and the loss of* `running-config` *changes may result in a loss of customer traffic.*

When the system is rebooted in recovery mode, the following text will be included in the serial console output as part of the boot process:

```
Mounting factory flash file system...
*************************************************************
*                  ALERT!                                   *
*    DXMOS has detected a problem and will enter recovery mode. *
*   Seeing this message may be indicative of faulty hardware.    *
*************************************************************
```

Another way to determine that the system is running in recovery mode is by issuing the `show version` command and confirming that the `Boot String` gives the correct location from where DXMOS was loaded, specifically `flash1`:

```
recovery-mode# show version
DXM Operating System (DXMOS), XKL LLC
4.7.0-c8e5b37fd9bb+ Jan 1 2025  22:48:53 UTC
Built from: git@gitlab.xkl.com:Software/dxmos-cmd.git
Boot String: file flash0:2:/dxmos/dxmos.exe
MiniBoot version 2.2.2(140)
Booted via manual boot

Gateware: startup-gateware P/N: 01000-02423-01
Uptime: 2:20:24:44
Last booted up at: 16:37:31 UTC-8 Fri Jan 1 2025
recovery-mode#
```

# 4.3 Factory Settings

This section contains the initial system factory-settings. For amplifier and transceiver information, see Appendix B - Optical Device Specifications.

## 4.3.1 System Factory Settings

When a DarkStar system starts up, the saved configuration file is loaded. On first boot, the system applies factory configuration settings. Table 4-5 lists the initial factory settings and any necessary customer actions at bring-up time.

**TABLE 4-5. Initial Factory Settings**

| Feature/ component | Factory/default setting | Action Required |
|---|---|---|
| Boot | System automatically boots from startup flash using the factory defaults described in this table, unless a saved configuration file exists. | Save the running configuration to flash (using the `write memory` command) or to a remote server (`write network`). |
| Console access | The serial console port is logged on and enabled. Establish a secure terminal configuration as soon as possible. The remote console port is not configured by default. | Assign a DNS server if required, using the `ip domain-name` and `ip name-server` commands. See DNS section.<br>Enable remote console IP access using the `management {ethernet\|osc}` and `ip address` commands. See associated Management section.<br>Enable secure console access using the `aaa authentication enable default` command. See AAA section. |
| Client transceivers | Client transceivers are ON (no laser shutdown). | No action required at bring-up. |
| Line transceivers | Line transceivers are ON (no laser shutdown). | No action required at bring-up. |
| OSC transceivers | Active.<br>When a system with no configuration file is powered up, the OSC transceivers will be ON (no laser shutdown). The IP address for the OSC is not configured by default. | An IP address must be assigned to the OSC in order to use it as a management port, providing a connection to the downstream DarkStar that must be similarly configured. |
| Fan speed | The fan is set to automatic. | No action required at bring-up. |
| Muxponders: If EDFA present | EDFA is ON.<br>Control mode is Automatic Gain Control. | No action required at bring-up.<br>EDFAs are pre-set to the appropriate power per channel. This number varies, depending on the number of channels and presence (or absence) of dispersion compensation. |

**TABLE 4-5. Initial Factory Settings**

| Feature/ component | Factory/default setting | Action Required |
|---|---|---|
| DLA/DMD-A amplifier systems | DGE/OCM is NOT enabled.<br><br>Amplification is OFF.<br><br>DXMOS-managed by default: This will put the input and output EDFA into Automatic (Gain Control) mode.<br><br>All input and output amps are disabled until explicitly enabled. | Configure the DGE-OCM:<br>Define a waveplan for each DGE-OCM by using the<br><band> or<br><plan> commands.<br><br>Example:<br>`DLA_System CONF-EQ[west]#` **`plan 100-itu`**<br><br>Configure the EDFAs:<br>Enter the correct channel-count by using the control automatic channel-count{n} command.<br>Enable each EDFA amplifier by using the no shutdown command.<br>Example:<br>`DMD-A_System CONF-AMP[input edfa]#` **`no shutdown`** |

**TABLE 4-5. Initial Factory Settings**

| Feature/ component | Factory/default setting | Action Required |
|---|---|---|
| DUA Amplifier System | Amplification is OFF.<br><br>DXMOS-managed by default: This will put the input and output EDFA into Automatic (Gain Control) mode.<br><br>All input and output amps are disabled until explicitly enabled. | Example<br>`DUA CONF-GROUP[seattle]# amplifier <-- tab help`<br><br>Amplifier, one of the following:<br>input<br>output<br>`DUA CONF-GROUP[seattle]# amplifier input <-- tab help`<br><br>Amplifier type, one of the following:<br>`edfa`<br>`raman <--- If raman is present for this group`<br>`DUA CONF-GROUP[seattle]# amplifier input edfa`<br>`DUA CONF-GROUP[seattle input edfa]# <-- tab help`<br><br>Command, one of the following:<br>`control`<br>`description`<br>`do`<br>`end`<br>`exit`<br>`no`<br>`show`<br>`shutdown`<br>`DUA CONF-GROUP[seattle input edfa]#` |

**TABLE 4-5. Initial Factory Settings**

| Feature/ component | Factory/default setting | Action Required |
|---|---|---|
| SpectraPath Provisioner/ Director System | WSS Waveplan is undefined.<br><br>Amplification is OFF.<br><br>DXMOS-managed by default: This will put the input and output EDFA into Automatic (Gain Control) mode.<br><br>All input and output amps are disabled until explicitly enabled. | Configure the WSS:<br>Define a waveplan for each WSS by using the `band` command. Establish front panel switch port connections with the `connect` command and manage optical powers with the `attenuate` command. Refer to the *Command Reference* on XKL's website for examples on how to use each command.<br><br>Configure the EDFAs:<br>Enter the correct channel count using the `control automatic channel-count` command.<br>Enable each EDFA amplifier by using the `no shutdown` command.<br>Example:<br>`Provisioner CONF-AMP[input edfa]# no shutdown` |
| SpectraPath Illuminator | OCM Waveplan is defined to follow the channel-spacing of the installed mux/demux filter.<br><br>Amplification is OFF.<br><br>DXMOS-managed by default: This will put the input and output EDFA into Automatic Gain Control mode.<br><br>All input and output amps are disabled until explicitly enabled. | Configure the OCM:<br>Define a waveplan for each OCM by using the `band` or `plan` commands.<br>Example:<br>`Illuminator CONF-OCM[demux]#` **`plan 100-itu`**<br><br>Configure the EDFAs:<br>Enter the correct channel-count by using the control automatic channel-count command.<br>Enable each EDFA by using the no shutdown command.<br>Example:<br>`Illuminator CONF-AMP[input edfa]#` **`no shutdown`** |

# 4.4 Configuring the System

The configuration file is saved to flash memory via a `write memory` command, and runs automatically at boot time. It not only includes system and network settings, but also configures management services such as SNMP and event logging that need to be in place for better troubleshooting.



*Config files contain encrypted passwords. Make sure you keep an accurate record of the passwords. You will need them if/when you restore a saved configuration.*

To create an effective running configuration file, you should follow the sequence in Table 4-6. Refer to the Command Reference on the XKL website for more information about using any of the commands mentioned here.

To remotely acquire a configuration file via DHCP and TFTP for semi-automated configuration, see Remote File Configuration.

**TABLE 4-6. Create a Running Configuration File**

| Step | | Command to Use |
|---|---|---|
| 1. | Specify a Host Name | • **hostname** |
| 2. | Set the System Clock | • **clock**<br>• **sntp server** |
| 3. | Configure a Static Host | • **ip host** |
| 4. | Specify a DNS Server and Domain Name | • **ip name-server**<br>• **ip domain-name** |
| 5. | Configure Security and AAA Authentication | • `password`<br>• **login**<br>• **enable secret**<br>• `transport input`<br>• `access-list`<br>• `aaa authentication` |
| 6. | Specify a Management IP Loopback Address | • `management`<br>• `ip address` |
| 7. | Configure Management Ethernet/OSC | • **management**<br>• **ip address** |
| 8. | Configure BERT Logging<br>Testing and logging (optional). | • **bert log** |
| 9. | Connecting a DarkStar System<br>Enable the connections via DXMOS. | • **connect** |
| 10. | Configure SNMP Traps and Monitoring | • `snmp-server` |
| 11. | Set up Remote Event Logging | • `logging` |
| 12. | Verify Your Connections | • **ping**<br>• **ping6** |
| 13. | Managing Amplifiers (system dependent) | • **shutdown**<br>• **no shutdown** |

### 4.4.1 Saving Your Configurations

For each configuration that you want to save, exit the configure mode (CONF#) and issue the `write memory` command from enable mode (#), as shown by the following example.

```
localhost CONF# exit
localhost# write memory
Are you sure? [yes/NO] yes
localhost#
```

After each new or updated configuration, you can issue the `write memory` command to save your settings. However, if you prefer, you can also issue the `write memory` command just once after all of your configurations.

Alternatively, you can save your configurations with the `do write memory` command, as shown below.

- Issuing the `do write memory` command directly from the configure mode:

  ```
  localhost CONF# do write memory
  Are you sure? [yes/NO] yes
  localhost CONF#
  ```

- Issuing the `do write memory` command directly from a sub-level configure mode (e.g., "CONF-FAN [n]"):

  ```
  localhost CONF-FAN[0]# do write memory
  Are you sure? [yes/NO] yes
  localhost CONF-FAN[0]#
  ```

**Note:** Upon issuing the `write memory` or the `do write memory` command, your changes will become permanent on system reboot or reload.

### 4.4.2 Specify a Host Name

```
hostname
```

When you connect power, the system boots and displays an initial console-terminal prompt `localhost>`, signifying that you are at a standard telecommunications command-line-interface (CLI) of the DXM Operating System (DXMOS) and ready to start issuing commands. You can keep the default hostname "localhost" or rename it. We recommend renaming it to the system that you are setting up (for example, "DMD-A").

The following example renames "localhost" to "System1" and then shows the changed prompt in disable mode (>).

```
localhost> enable
localhost# configure
localhost CONF# hostname System1
System1 CONF# exit
System1# write memory
Are you sure? [yes/NO] yes
System1# exit
System1>
```

**Note:** For our configuration examples, the prompt will start from the enable mode (i.e., #), as depicted below.

```
localhost> enable
localhost#
```

**Note:** To have your CLI prompt-name differ from the hostname, consult the `prompt-name` command in the Command Reference.

## 4.4.3 Set the System Clock

```
clock, sntp-server
```

Specify the clock time and system date. You can also use a Simple Network Time Protocol (SNTP) server to set the clock.

### 4.4.3.1 Date and Time

DarkStar systems ship with the clock set to Universal Time (UTC). You can manually configure the clock, or automatically configure it from the SNTP server time.

Depending on the mode, the `clock` command sets different aspects of the clock.

- Enable mode (`#`): Sets the system time and date.
- Configure mode (`CONF#`): Sets the time zone and Daylight Savings Time (DST) behavior.

The following example shows how to manually set the system clock—in this case to Pacific DST (`UTC-8` for the Pacific time zone and then `summer-time usa` for the DST).

```
localhost# clock set 08:40:15 13 January 2025
localhost# show time
High resolution clock (corrected): 08:40:20 UTC Wed Jan 1 2025
localhost# configure
localhost CONF# clock timezone -8 0
localhost CONF# clock summer-time usa
localhost CONF# exit
localhost# write memory
Are you sure? [yes/NO] yes
localhost# show time
High resolution clock (corrected): 00:40:33 UTC-8 Wed Jan 1 2025
```

### 4.4.3.2 SNTP Server

If you run an SNTP server on a management network reachable by the DarkStar system, we recommend enabling clock updates by running the `sntp server` command.

Specify one or more Simple Network Time Protocol (SNTP) servers for setting the system clock, and automatically synchronize the system clock with the external SNTP server. Specify the server either by its IP address or hostname.

```
localhost# configure
localhost CONF# sntp server ip address
localhost CONF# exit
localhost# write memory
Are you sure? [yes/NO] yes
localhost#
```

### 4.4.4 Configure a Static Host

```
ip host
```

Specify a static mapping of host to address with the `ip host` command. These hosts will be searched in the order specified and take priority over the DNS cache and name servers.

```
localhost# configure
localhost CONF# ip host name address
localhost CONF# exit
localhost#
```

Note: DXMOS only allows host names that comply with typical host name restrictions laid out in RFC 822.

### 4.4.5 Specify a DNS Server and Domain Name

```
ip name-server, ip domain-name
```

#### 4.4.5.1 DNS Server

Specify an additional name server. Servers are referenced in the order specified.

```
localhost# configure
localhost CONF# ip name-server address
localhost CONF# exit
localhost#
```

#### 4.4.5.2 Domain Name

Define an additional search domain on the DNS server that you have specified using the `ip name-server` command. When name resolution is performed on an unqualified hostname, lookups will be performed by appending these domain names in the order configured. These lookups apply only to queries that use the cache and DNS, not to statically configured hosts.

```
localhost# configure
localhost CONF# ip domain-name name
localhost CONF# exit
localhost#
```

## 4.4.6 Configure Security and AAA Authentication

Direct access is available via the console terminal connection. That connection should be secured by limiting physical access of the system to authorized persons only. In rare circumstances, system recovery requires access to the console. If the site is not continually attended, secure remote access to the console terminal connection can be achieved in several ways. For example, a network terminal server can be connected to the console port, with access to the server secured by password and connected to a network exclusively provisioned to support access by network management.

You can administer the system from a remote virtual terminal (VTY) using Telnet or SSH (Secure Shell). In addition to using passwords for Telnet and SSH access, DarkStar systems may also be secured by setting passwords for enable mode (#) and serial console access.

Topics covered:

- Configure Passwords for Console and Remote Access
- Configure Enable Mode Passwords
- Configure Remote Connections
- Set Up Access Control Lists

### 4.4.6.1 Configure Passwords for Console and Remote Access

```
password, login, transport
```

Secure the console terminal (CTY) and the remote virtual terminal (VTY) line with either a password or a username/password combination.

| | |
|---|---|
|  | *See "Configuring Security" in the Command Reference on the XKL website for more information about setting passwords and using other DXMOS security commands.* |

| | |
|---|---|
|  | **If the customer (startup) flash becomes unreadable for any reason, the DarkStar system enters recovery mode and reverts to factory settings. Telnet and SSH access is disabled and only the console can be used for diagnosis and repair.** |

#### 4.4.6.1.1 Anonymous CTY Connection

The following example shows how to set a password for an anonymous CTY connection. Setting the password will overwrite any previously set password on the CTY:

```
localhost# configure
localhost CONF# line console
localhost CONF-LINE-CTY# password new-password
localhost CONF-LINE-CTY# end
localhost# write memory
Are you sure? [yes/NO] yes
```

The following example shows how to remove a CTY password. After removing a password, you can either set a new password or leave the system unprotected (NOT recommended):

```
localhost# configure
localhost CONF# line console
```

```
localhost CONF-LINE-CTY# no password
localhost CONF-LINE-CTY# end
localhost# write memory
Are you sure? [yes/NO] yes
```

#### 4.4.6.1.2 Local User Accounts

Local user accounts can be used by the console and the VTY. The following example shows how to create user accounts and enable them for the console. Setting `login local` enables use of a local user/password database, and supersedes use of the anonymous password.

```
localhost# configure
localhost CONF# user username password [password input type] new-password privilege
privilege level
localhost CONF# user another-user password [password input type] another-password privilege
privilege level
localhost CONF# line console
localhost CONF-LINE-CTY# login local
localhost CONF-LINE-CTY# end
localhost# write memory
Are you sure? [yes/NO] yes
localhost#
```

| | |
|---|---|
|  | *The same pool of accounts is used to store users for both CTY and VTY access. Be aware that any user created for CTY access may also be used to login via VTY access, assuming VTY is configured for remote login via Telnet or SSH.* |

| | |
|---|---|
|  | **If you use login local, then exit without defining any usernames or passwords, you can lock yourself out of your system.** |

The following example shows how to stop using user accounts and instead use an anonymous login. Accounts will remain in the system and configure file, but cannot be used to access the machine through the console:

```
localhost# configure
localhost CONF# line console
localhost CONF-LINE-CTY# login
localhost CONF-LINE-CTY# end
localhost# write memory
Are you sure? [yes/NO] yes
localhost#
```

| | |
|---|---|
|  | *If you set a single-login password for CTY or VTY access, it will remain in the configuration file, but will not remain in effect. The single-login password is not required while user accounts are active. However, if you then revert to single-login password again, gaining access will still require the single-login password you originally assigned. If login local is set, only the username/password pairs may be used at that time.* |



**If the customer (startup) flash becomes unreadable for any reason, the DarkStar system enters recovery mode and reverts to factory settings. Telnet and SSH access is disabled and only the console can be used for diagnosis and repair.**

#### 4.4.6.2 Configure Enable Mode Passwords

```
enable secret
```

Setting a password for enable mode (#) prevents unauthorized changes from being made to a DarkStar system's settings. The user will be prompted for a password when the `enable` command is used.

The following example shows how to assign a password for enable mode. Assigning a password will override any previously set password.

```
localhost# configure
localhost CONF# enable secret password
localhost CONF# exit
localhost# write memory
Are you sure? [yes/NO] yes
localhost#
```

The following example shows how to remove a password for enable mode. After removing a password, you can either set a new password or leave the system unprotected while in enable mode:

```
localhost# configure
localhost CONF# no enable secret
localhost CONF# end
localhost# write memory
Are you sure? [yes/NO] yes
```

### 4.4.6.3 Configure Remote Connections

```
password, login, transport input
```

A DarkStar system supports both SSH and Telnet remote console (VTY) access.

Customers who have isolated and protected their DarkStar management network sufficiently find that Telnet is acceptable for day-to-day use. Both SSH and Telnet can be configured at any time; setup is similar in each case.

Three commands are used to enable remote access via either Telnet or SSH:

- The `password` command sets the password for VTY.
- The `login` command enables remote login over VTY.
- The `transport` command configures VTY to accept login attempts via the specified protocol.

The following explains the general process of configuring the DarkStar to allow remote (VTY) access:

1. The system has four copper Ethernet connections and up to two fiber Ethernet connections.
   How the Ethernet interface works will depend on the system:
   - On CMD-based DarkStar systems, the four copper Ethernet connections act as a switch hooked up to `management ethernet 0`. For details, see the `management` command in the Command Reference.
   - On non CMD-based DarkStar systems, the four copper ports are managed with IP networks individually.

   **Note:** To determine if the system is CMD-based, issue the `show hardware` command.

   Select a DarkStar Ethernet connection and configure its IP address to be compatible with the local subnet. Use a cable to connect the system Ethernet connection to the local subnet.
2. Remote access requires the `transport input` command to be issued at the `CONF-LINE-VTY#` prompt. You can specify `all` for both Telnet and SSH, `telnet` for Telnet only, and `ssh` for SSH only.

   ```
   localhost# configure
   localhost CONF# line vty
   localhost CONF-LINE-VTY# transport input all
   ```

3. Unlike the console, remote access requires some form of authentication. Local authentication can be by anonymous login, which needs an anonymous `password` and a `login` command.

   ```
   localhost CONF-LINE-VTY# password new-password
   localhost CONF-LINE-VTY# login
   ```

Local access can also use user/password accounts. Local user/password accounts are created as described in Configure Passwords for Console and Remote Access.

After creating the local user/password database, enable it for use by issuing the `login local` command.

```
localhost CONF-LINE-VTY# login local
```

#### 4.4.6.3.1 Telnet Access

Telnet access is disabled until the Virtual Terminal (VTY) password is set. VTY lines must also be configured to accept connections via Telnet. VTY lines can be accessed via any configured Ethernet port.

| | |
|---|---|
|  | *Be aware that if AAA new-model is set, then AAA access rules apply instead of the requirements outlined here.* |

Be mindful of the following:

- The `password` command sets the password for VTY.
- The `login` command enables remote login over VTY.
- The `transport input telnet` command configures VTY to accept login attempts via the Telnet protocol.

The following example shows how to configure remote Telnet access to all configured Ethernet ports:

```
localhost# configure
localhost CONF# line vty
localhost CONF-LINE-VTY# password new-password
localhost CONF-LINE-VTY# login
localhost CONF-LINE-VTY# transport input telnet
localhost CONF-LINE-VTY# end
localhost# write memory
Are you sure? [yes/NO] yes
localhost#
```

**Note:** Issuing the `transport input telnet` command will disable remote SSH access, if previously enabled.

#### 4.4.6.3.2 SSH Access

SSH host keys are used for SSH authentication. A DarkStar system ships with the necessary SSH public and private keys pre-installed in its file system, and boots initially with SSH remote console access disabled. The SSH server in DXMOS only supports password authentication. It does not support public-key or host-based authentication. SSH clients, whatever their platform, do not require additional SSH key generation or management to access the DarkStar system. However, to ensure the continued security of your system, you may want to replace DXMOS' SSH host keys from time to time. Refer to SSH Key Replacement further on in this section.

To enable SSH on a VTY line, ensure that the line already has a password (use the `password` command), enable remote login (use the `login` command), and configure SSH as a transport type (use the `transport input ssh` command).

On first console access, an SSH client will ask the console operator to confirm DXMOS' SSH host key; subsequent SSH login requests will only request a password.

The following example shows how to configure remote SSH access to all configured Ethernet ports:

```
localhost# configure
localhost CONF# line vty
localhost CONF-LINE-VTY# password new-password
localhost CONF-LINE-VTY# login
localhost CONF-LINE-VTY# transport input ssh
localhost CONF-LINE-VTY# end
localhost# write memory
Are you sure? [yes/NO] yes
localhost#
```

**Note:** Issuing the `transport input ssh` command will disable remote Telnet access, if previously enabled.

#### 4.4.6.3.3 SSH Key Replacement

A DarkStar system ships with SSH keys already in place. To replace the DarkStar SSH keys, you must generate new SSH keys and transfer them to the DarkStar system.

A DarkStar system stores its SSH keys in its file system. The public and private keys are referred to by their well-known names "hostkey-public" and "hostkey-private," as reflected by the actual filenames in the DarkStar file system:

- DSA hostkey-private is equivalent to writing "dxmos/hostkey-private.dat"
- DSA hostkey-public is equivalent to writing "dxmos/hostkey-public.dat"
- RSA hostkey-private is equivalent to writing "dxmos/rsa-hostkey-private.dat"
- RSA hostkey-public is equivalent to writing "dxmos/rsa-hostkey-public.dat"

You can generate new SSH keys using any keygen utility that can create DSA or RSA key pairs for the SSH v2 protocol. Instructions for generating keys vary by platform. For example, the keygen utility for Linux is ssh-keygen. Similar tools exist for other platforms.



*RSA (2048 bit) and DSA keys with PEM format are supported by the DarkStar systems.*

*Option "-m PEM" if using ssh-keygen*

**Generate DSA Keys:**

```
user@linux:~$ ssh-keygen -b 1024 -t dsa -m PEM

Generating public/private dsa key pair.

Enter file in which to save the key (/home/user/.ssh/id_dsa): /home/user/id_dsa

Enter passphrase (empty for no passphrase):

Enter same passphrase again:

Your identification has been saved in /home/user/id_dsa.

Your public key has been saved in /home/user/id_dsa.pub.

The key fingerprint is:

SHA256:Pw64uUMt+JljDVvDzXumopx6NgInrvi9WVO9EKqY5/k user@linux.xkl.com

The key's randomart image is:

+---[DSA 1024]----+
|                 |
|                 |
|        .        |
|       . o       |
|     ..oSo.      |
|  ooo.+o=oo.     |
```

```
| .o+oo+O..+.     |
|. .+.=%=oo..o    |
|oo. BOE* .o+     |
+----[SHA256]-----+
user@linux:~$
```

**Generate RSA Keys:**

```
user@linux:~$ ssh-keygen -b 2048 -t rsa -m PEM
Generating public/private rsa key pair.
Enter file in which to save the key (/home/tle/.ssh/id_rsa): /home/user/id_rsa
Enter passphrase (empty for no passphrase):
Enter same passphrase again:
Your identification has been saved in /home/user/id_rsa.
Your public key has been saved in /home/user/id_rsa.pub.
The key fingerprint is:
SHA256:ujolM4M/IsNTasFL4Fm6KG2lEixggg0TWz/B/2vMuaA user@linux.xkl.com
The key's randomart image is:
+---[RSA 2048]----+
|.....            |
|oo ...           |
|o+  o.           |
|=... ..          |
|O +.   .S        |
|oO..* ...        |
|=o*+ *oo o       |
|*B= +. o*        |
|o=..E+....       |
+----[SHA256]-----+
user@linux:~$
```

At the first ssh access request, each client detects the change in the DarkStar keys and asks the console operator to take action—for example, by verifying that access is required or by confirming that the previously saved SSH public key should be removed. Subsequent ssh access requests negotiate silently, as before.

The following example shows how to copy SSH keys from the TFTP server 123.123.1.98 to a DarkStar system. Keys can also be copied from an FTP server using the `curl` command. A description of the `curl` command can be found in section 3.6.8 of the *XKL Command Reference*:

```
localhost# tftp get 123.123.1.98 id_dsa hostkey-private
Are you sure? [yes/NO] yes
localhost# tftp get 123.123.1.98 id_dsa.pub hostkey-public
Are you sure? [yes/NO] yes
localhost#
localhost# tftp get 123.123.1.98 id_rsa rsa-hostkey-private
Are you sure? [yes/NO] yes
localhost# tftp get 123.123.1.98 id_rsa.pub rsa-hostkey-public
Are you sure? [yes/NO] yes
localhost#
```

#### 4.4.6.3.4 SSH Authentication Methods

Together with password-based authentication, DXMOS also supports passwordless authentication methods (i.e: host-based authentication, key-based authentication) that enhances security and allows users to log in without a password.



*When multiple authentication methods are enabled, the order of the authentication will be decided by the SSH client.*

*If AAA systems are utilized for Authentication, Authorization, and Accounting, please consult the section titled "**Combination with AAA Systems**" in* Table 4-7.

**TABLE 4-7. Supported Authentication Methods**

| | Password-based | Key-based | Host-based |
|---|---|---|---|
| **Authentication** | Based on user password, verifying the user | Based on a unique user key pair, verifying the user | Based on pre-shared host keys, verifying the host and user |
| **Security** | Less secure | Most secure | More secure |
| **Use Cases** | Suitable for low-risk environments, and ease of use is more priority than security. | General remote access, automating tasks, and any situation where secure and reliable authentication is needed. | Automated tasks, scripts, or environments where trust in a specific server is established and maintained. |
| **Pros** | Simple to set up and use. | The most secure due to the mathematical difficulty of cracking keys.<br>Convenient, and suitable for environments with individual user access. | Simple to set up and maintain, especially for automated connections or environments where the same host keys are used consistently.<br>Suitable for environments where all users on a specific host have the same level of access and trust. |
| **Cons** | Passwords can be easily compromised if intercepted or stored on a server.<br>Vulnerable to brute-force attacks, phishing, and stolen passwords. | Requires more setup and management.<br>Private keys must be stored securely. If a private key is compromised, it could lead to unauthorized access.<br>Keys cannot be easily changed like passwords. | Less secure than public key authentication as it relies on the client's stored host key and can be vulnerable to man-in-the-middle attacks if the server's host key is compromised. |
| **Client Setup** | N/A | The client user generates a public/private key pair<br>`~$ ssh-keygen -t rsa -b 2048 -m PEM -f ~/.ssh/id_rsa`<br>`~$ ls -l ~/.ssh/`<br>`total 169`<br>`-rw------- 1 tle users 1675 Apr 29 14:42 id_rsa`<br>`-rw-r--r-- 1 tle users 391 Apr 29 14:42 id_rsa.pub`<br>**Importance: Please ensure that the following settings are enabled in the Client's SSH**<br>***PubkeyAuthentication*** is enabled.<br>***PubkeyAcceptedKeyTypes*** must include either ssh-dss or ssh-rsa keys, as DXMOS currently supports these. | A public/private key pair is generated for the client's host. (**Note:** The key pair must be at the host level, not the user level.)<br>`~$ sudo ssh-keygen -t rsa -b 2048 -m PEM -f /etc/ssh/ssh_host_rsa_key`<br>`~$ ls -l /etc/ssh/`<br>`total 624`<br>`-rw------- 1 root root 1679 Dec 15 2017 ssh_host_rsa_key`<br>`-rw-r--r-- 1 root root 392 Dec 15 2017 ssh_host_rsa_key.pub`<br>**Importance: Please ensure that the following settings are enabled in the Client's SSH**<br>***HostbasedAuthentication*** is enabled.<br>***EnableSSHKeysign*** is enabled so that the client can sign its public key for host-based authentication.<br>***HostbasedKeyTypes*** must include either ssh-dss or ssh-rsa keys, as DXMOS currently supports these. |

| | Password-based | Key-based | Host-based |
|---|---|---|---|
| **Server (DXMOS) Setup** | Configure local users, remote users on AAA system (such as: Radius or Tacacs+), or line password<br>Using line password:<br><br>localhost# configure<br>localhost CONF# line vty<br>localhost CONF-LINE-VTY# login<br>localhost CONF-LINE-VTY# password 0 <mypwd><br>localhost CONF-LINE-VTY# end<br><br>Or, using local user:<br><br>localhost# configure<br>localhost CONF# line vty<br>localhost CONF-LINE-VTY# login local<br>localhost CONF-LINE-VTY# exit<br>localhost CONF# user testusr password 0 testpwd<br>localhost CONF# end<br><br>Or, using remote user:<br><br>**Note:** Please ensure that the users and passwords are set up on the AAA system (such as RADIUS or TACACS+), and DXMOS can reach the AAA system.<br><br>localhost# configure<br>localhost CONF# radius-server host <rad-server> key <rad-key><br>localhost CONF# tacacs-server host <tac-server> key <tac-key><br>localhost CONF# aaa authentication login default group radius group tacacs+<br>localhost CONF# aaa new-model<br>localhost CONF# end | The user's public keys are transferred via the management networkusing FTP or TFTP to the **/dxmos/authorized_keys/** directory, as shown in the<br>following example:<br><br>localhost# tftp get <tftp-server> <path_to_id_rsa.pub> /dxmos/authorized_keys/client1key<br><br>And, using the command "**show ssh-authorized-keys [ file filename \| verbose ]**" to verifying the authorized keys:<br><br>localhost# show ssh-authorized-keys<br><br>'/dxmos/authorized_keys/':<br>floodkey file 788 bytes Apr 29 2025 14:46:26<br>authorized_keys_tle file 391 bytes Apr 29 2025 12:22:05<br>flood_key file 788 bytes Apr 29 2025 12:11:13<br><br>localhost# show ssh-authorized-keys file floodkey<br><br>ssh-rsa AAAAB3NzaC1yc2EAAAADAQABAAABAQ...<br>localhost# | The trusted client hosts and allowed client users are transferred via the management network using FTP or TFTP to the **/dxmos/trusted_hosts/** directory;<br>And, the client host's public keys are transferred via TFTP to the **/dxmos/known_hosts/** directory, as shown in the following example:<br>localhost# tftp get <tftp-server> <path_to_shosts.equiv> /dxmos/trusted_hosts/shosts.equiv<br>localhost#<br>localhost# tftp get <tftp-server> <path_to_ssh_known_hosts> /dxmos/known_hosts/ssh_known_hosts<br>localhost#<br>And, using the commands "**show ssh-trusted-hosts [ file filename \| verbose ]**" and "**show ssh-known-hosts [ file filename \| verbose ]**" to verifying the authorized keys:<br>localhost# show ssh-trusted-hosts<br><br>'/dxmos/trusted_hosts/':<br>shosts.equiv_all file 31 bytes May 30 2025 13:01:04<br>localhost#<br>localhost# show ssh-trusted-hosts file shosts.equiv_all<br><br>100.40.10.99 +root<br>100.40.10.99 +tle<br>localhost#<br>localhost# show ssh-known-hosts<br><br>'/dxmos/known_hosts/':<br>ssh_known_hosts_all file 990 bytes May 28 2025 15:25:19<br><br>localhost# show ssh-known-hosts file ssh_known_hosts_all<br><br>100.40.10.99 ssh-rsa AAAAB3NzaC1yc2EAAAADAQABAAABAQ...<br>100.40.10.99 ssh-dss AAAAB3NzaC1kc3MAAACBAOMGM6ao5e...<br>localhost# |

| | Password-based | Key-based | Host-based |
|---|---|---|---|
| **Combination with AAA systems** | **Authentication:** It is configurable to utilize remote users, allowing for authentication delegation to a AAA system (like RADIUS or TACACS+). This process verifies the client's identity by checking their password against those stored in the AAA systems.<br><br>**Authorization:** AAA systems (like RADIUS or TACACS+) verify the credentials of the logged-in user and grant them access to specified resources and actions as defined in the AAA systems.<br><br>**Accounting:** AAA systems (like RADIUS or TACACS+) will track and log the logged-in user activity, including resource usage, for auditing, billing, and reporting purposes. | **Authentication:** DXMOS does not support delegating key-based authentication to an AAA system. Instead, it will verify the client's identity by checking their public key against the authorized keys stored in the /dxmos/ authorized_keys/ directory.<br><br>**Authorization:** AAA systems (like RADIUS or TACACS+) verify the credentials of the logged-in user and grant them access to specified resources and actions as defined in the AAA systems.<br>**Note:** AAA Authorization Exec through RADIUS does not apply to SSH users authenticated by key-based method. AAA Authorization Exec through LOCAL or TACACS+ will apply.<br><br>**Accounting:** AAA systems (like RADIUS or TACACS+) will track and log the logged-in user activity, including resource usage, for auditing, billing, and reporting purposes. | **Authentication:** DXMOS does not support delegating key-based authentication to an AAA system. Instead, it will verify the client's identity by comparing their host's public key and username with the known host keys maintained in the /dxmos/known_hosts/ directory, as well as the trusted usernames associated with the host found in the /dxmos/ trusted_hosts/ directory.<br><br>**Authorization:** AAA systems (like RADIUS or TACACS+) verify the credentials of the logged-in user and grant them access to specified resources and actions as defined in the AAA systems.<br>**Note:** AAA Authorization Exec through RADIUS does not apply to SSH users authenticated by host-based method. AAA Authorization Exec through LOCAL or TACACS+ will apply.<br><br>**Accounting:** AAA systems (like RADIUS or TACACS+) will track and log the logged-in user activity, including resource usage, for auditing, billing, and reporting purposes. |

| | Password-based | Key-based | Host-based |
|---|---|---|---|
| **DXMOS Specification** | When multiple authentication methods are enabled on DXMOS, the order of the authentication will be decided by the SSH client. | When multiple authentication methods are enabled on DXMOS, the order of the authentication will be decided by the SSH client.<br><br>DXMOS does not support the key-based authentication delegation to an AAA system (such as: RADIUS or TACACS+). However, it still support AAA authorization and accounting features for logged-in users.<br><br>AAA Authorization Exec through RADIUS does not apply to SSH users authenticated by key-based method. AAA Authorization Exec through LOCAL or TACACS+ will apply.<br><br>Currently, DXMOS supports DSA and RSA SHA1 keys.<br><br>DXMOS recently does not support user-specific authorized keys. The authorized keys are system specific. As a result, the authorized keys added to DXMOS will apply to all logged-in users.<br><br>When a client attempts to establish connection, DXMOS will check the public key of the client user on the respective client system. | When multiple authentication methods are enabled on DXMOS, the order of the authentication will be decided by the SSH client.<br><br>DXMOS does not support the host-based authentication delegation to an AAA system (such as: RADIUS or TACACS+). However, it still supports AAA authorization and accounting features for logged-in users.<br><br>AAA Authorization Exec through RADIUS does not apply to SSH users authenticated by key-based method. AAA Authorization Exec through LOCAL or TACACS+ will apply.<br><br>Currently, DXMOS supports DSA and RSA SHA1 keys.<br><br>DXMOS recently does not support user-specific trusted hosts definition (i.e.: .rhosts). The trusted hosts are system specific (i.e., hosts.equiv). Consequently, the trusted hosts added to DXMOS are system-specific and apply to all logged-in users.<br><br>DXMOS does not support netgroup.<br><br>When a client attempts to establish connection, DXMOS will check the host's public key and the client's username on the respective client system.<br><br>**Note:** For security purposes, the trusted hosts should designate only authorized client users that are connecting to DXMOS from the client system. The trusted hosts should not be configured to include any users unless specifically intended. |

#### 4.4.6.3.5 Set Up Remote AAA with RADIUS and TACACS+

RADIUS and TACACS+ use a remote server to manage a database of user/password accounts, along with other security properties. When remote AAA is used, it supersedes/hides/replaces the local database access configuration. DXMOS queries a RADIUS or TACACS+ server that provides centralized authentication, authorization, and accounting services.

The use of AAA services also allows more precision and control when using local login methods.

| | |
|---|---|
|  | *The TACACS+ protocol uses TCP and is not compatible with the earlier TACACS protocol that uses UDP as a transport.* |
|  | *DXMOS does not support the Message-Authenticator attribute (Type 80) in RADIUS packets. Please ensure that the RADIUS server is configured to not require this attribute by setting the flag 'require_message_authenticator' or a similar option to false or no. If this is not done, the server may ignore or reject requests from DXMOS, which could result in unsuccessful authentication.* |

For more information, refer to the Command Reference on the XKL website.

#### 4.4.6.4 Set Up Access Control Lists

```
access-list
```

You can use Access Control Lists (ACLs) to enhance security and mitigate opportunities for denial-of-service attacks. This feature is particularly important if the DarkStar system is not on a private management network and/or remote Telnet/SSH access is enabled. (Refer to the Command Reference on the XKL website for more information about setting up ACLs.)

Incoming router traffic is compared to ACL entries based on the order that the entries occur in the router. The router searches for matches and denies traffic if no match is found (i.e., there is an implied denial for traffic that is not explicitly permitted). A single-entry ACL with only one deny entry has the effect of denying all traffic. Since new statements are automatically added to the end of the list, it may be helpful to place frequently used entries at the top of the list.

The following example shows how to enable an ACL on the VTY:

```
localhost# configure
localhost CONF# access-list 1 permit 123.123.0.0/16
localhost CONF# do show running-config access-list

running-config:
access-list 1 permit 123.123.0.0/16
```

Instead of designating single-password Telnet or SSH access, you may alternatively create user accounts, each with its own username and password. Multiple accounts may be used with Telnet, SSH, or both, depending upon settings enabled through the `transport input` command.

### 4.4.7 Specify a Management IP Loopback Address

```
management, ip address
```

A system loopback address is a virtual IP address. It is not associated with a specific physical interface; rather, it serves as a global IP address for the DarkStar system.

A loopback address can ensure access to a DarkStar system regardless of the state of physical interfaces. As long as routing is configured and at least one physical interface remains active, it is possible to access a DarkStar system via its loopback address.

If there is a loopback address, it is used as the source address for outbound IP messages instead of the IP address of the physical interface. However, if the loopback address is unconfigured, the IP address of the physical interface is used. DarkStar systems respond to inbound traffic using the destination IP, which may be a physical interface address or the loopback address, as determined by the sender.

Because a loopback address provides a consistent identity, it may be helpful to use it with protocols such as TFTP, FTP, SNMP, SNTP, Syslog, RADIUS, TACACS+, and outbound Telnet. The loopback address is established using the same configuration commands as for a physical interface, the only difference being that the device name is `loopback`.

The following example shows how to configure a loopback address:

```
localhost# configure
localhost CONF# management loopback 0
localhost CONF-MGMT-LOOP[0]# ip address 172.16.1.192/32
localhost CONF-MGMT-LOOP[0]# exit
```

## 4.4.8 Configure Management Ethernet/OSC

```
management, ip address, ip dhcp
```

Figure 4-5 shows the four Ethernet ports found on the front of all XKL DarkStar systems. These connections use the designations E0, E1, E2, and E3.

**FIGURE 4-5. DarkStar Ethernet Ports**

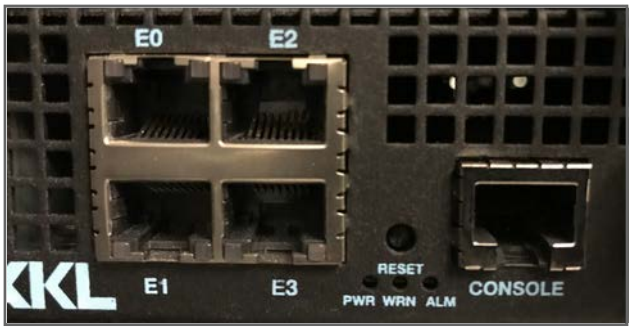


OSC ports are provisioned individually with each interface supplying individual IP address assignments or using DHCP. For example:

```
localhost# configure
localhost CONF# management osc 0
localhost CONF-MGMT-OSC[0]# ip address 172.16.0.1/30
localhost CONF-MGMT-OSC[0]# exit
localhost CONF# management osc 1
localhost CONF-MGMT-OSC[1]# ip dhcp
localhost CONF-MGMT-OSC[1]# exit
localhost# write memory
Are you sure? [yes/NO] yes
```

How the Ethernet ports work will depend on whether your system is CMD-based or not. To find out, issue the `show hardware` command.

**For CMD-based systems:** The command `management ethernet 0` is used for the management side of the switch on all the front panel Ethernet ports. For example:

```
localhost# configure
```

```
localhost CONF# management ethernet 0
localhost CONF-MGMT-ETH[0]# ip address 192.168.0.1/24
localhost CONF-MGMT-ETH[0]# end
localhost# write memory
Are you sure? [yes/NO] yes
```

With these CMD-based systems, any of the four front panel Ethernet ports (E0, E1, E2, E3) may be used to connect to the Ethernet 0 IP assignment. The four front-panel Ethernet ports act as a layer-2 switch. Linked-together, systems via copper Ethernet cables may be provisioned by assigning another unique IP address on the same IP network at `management ethernet` *0* of each additional system. For example on a second system:

```
localhost# configure
localhost CONF# management ethernet 0
localhost CONF-MGMT-ETH[0]# ip address 192.168.0.2/24
localhost CONF-MGMT-ETH[0]# end
localhost# write memory
Are you sure? [yes/NO] yes
```

Static or rip routes are still used to reach any defined OSC networks from the front panel.

**For non CMD-based systems:** The Ethernet ports are provisioned individually for IP address assignments. For example:

```
localhost# configure
localhost CONF# management ethernet 0
localhost CONF-MGMT-ETH[0]# ip address 192.168.0.1/24
localhost CONF-MGMT-ETH[0]# exit
localhost CONF# management ethernet 1
localhost CONF-MGMT-ETH[1]# ip dhcp
localhost CONF-MGMT-ETH[1]# exit
localhost# write memory
Are you sure? [yes/NO] yes
```

As individual network addresses are assigned, static or rip routes must be defined if multiple systems need to reach external host systems via next-hops through the management network for the OSCs or other Ethernet ports.

**Notes:**

- For CMD-based systems, linked-together systems connect to one another in a LAN segment. If the Ethernet interface on one particular system is shutdown (per `shutdown` command), incoming and outgoing traffic is disconnected on that system. The other systems linked to it remain unaffected. For information on the `shutdown` command, see the Command Reference on the XKL website.
- For CMD-based systems, no additional configuration is necessary for the switch. Routing configuration in DXMOS is still needed to reach the Loopback and OSC IP networks that may have been provisioned from the DarkStar Ethernet ports.
- **IPv6** addresses are assigned using IPv6 Stateless Address Autoconfiguration (see RFC 2462). This requires that there be at least one IPv6 router accessible on the local link. The router should be configured so that the router advertisement has the “O” flag set and the “M” flag cleared. The prefix-information option in the router advertisement should have both the “L” and “A” flags set.

### 4.4.8.1 Switching Loops

A switching loop only affects systems equipped with the Ethernet switch. This switch acts as a Layer-2 switch, managing the system's four front-panel Ethernet ports (E0–E3) to which copper LAN cables connect. In other words, all 4 Ethernet ports connect to this Ethernet switch and share the same broadcast domain. **Note:** To determine if a system has the Ethernet switch, issue the `show hardware` command. If the system is CMD based, the Ethernet switch is available. If CCC based, the Ethernet switch is not available.

Without a loop-preventive method applied, such as the Spanning Tree Protocol (STP), a switching loop can arise if there are multiple paths between switches. When the switching loop occurs, broadcasts and multicasts are repeatedly received and forwarded by the switches at every port. These broadcast storms flood the network and may cause the switches to overload and crash.

The following use-case topologies in Figure 4-6 will cause a switching loop. In the top graphic, the 3 systems will make a broadcast domain if they are directly connected to each other.

**FIGURE 4-6. Switching Loop**

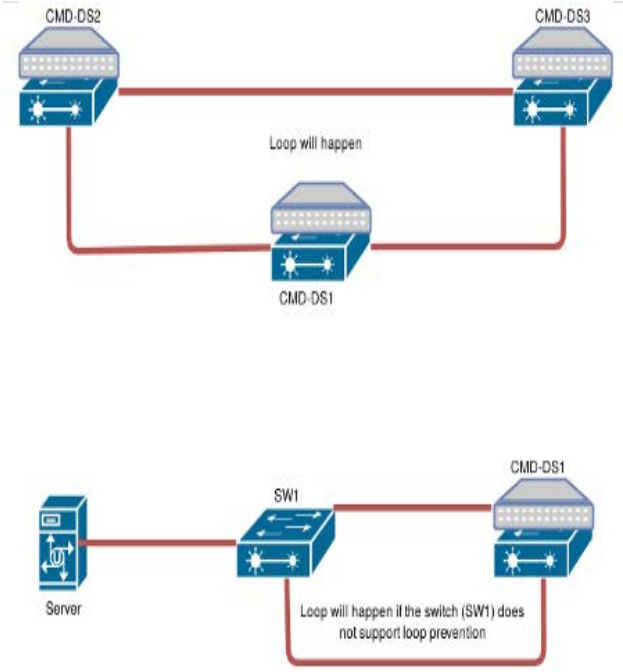


After Ethernet configuration is completed, the DarkStar system can be integrated into your management network.

### 4.4.9 Configure BERT Logging

```
bert log
```

Use bit error rate testing (BERT) to stress-test cables and interfaces and track down the source of signal problems. When you run a BERT, a pseudo-random binary sequence (PRBS) is generated and sent to another interface, and the originating and received signal are compared for errors. If everything is functioning properly, the two signals should be the same.

On startup of a DarkStar system, BERT logging is disabled by default. Configure logging settings using the `bert log` command, which allows you to specify the time in minutes between logs, as well as the maximum number of logs kept. Use the `write memory` command to save these settings to the startup configuration file, as in this example:

```
localhost CONF# bert log 15
localhost CONF# exit
localhost# write memory
Are you sure? [yes/NO] yes
localhost# show startup-config
Contents of config file /dxmos/config.dat:
... ...
bert log 15
... ...
```

For more details about BERT, see BERT Logging.

### 4.4.10 Configure SNMP Traps and Monitoring

```
snmp-server
```

DarkStar systems support both the SNMPv1 and SNMPv2c versions of SNMP. To monitor detailed DarkStar system status, use the XKL-proprietary SNMP management objects and traps defined in the current XKL MIB, which can be obtained from the XKL website.

To monitor a DarkStar system using SNMP, first configure DarkStar SNMP settings and enable SNMP asynchronous alarms and alerts ("traps"), then configure your monitoring system to recognize XKL-specific traps and to access XKL management objects in the SNMP database. See Table 4-8.

Use the `snmp-server` command to configure SNMP settings and enable SNMP traps. The flow for setting up SNMP is shown below.

The `community` *`string`* argument is required to set up monitoring.

```
localhost# configure
localhost CONF# snmp-server community string
```

Then set up trap generation.

```
localhost CONF# snmp-server enable traps [snmp|xkl|xkl-generic]
localhost CONF# snmp-server host address [Community Name]
```

Additionally, you can specify a contact and location for the community string and disable the use of SNMP v. 2c. Refer to the Command Reference on the XKL website for more information.

**TABLE 4-8. SNMP Parameters for Initial Configuration**

| Parameter | Definition |
|---|---|
| `community` *`string`* | Start a read-only SNMP agent using the community string specified by *`string`*. |
| `enable traps [snmp\|xkl\|xkl-generic]` | Turn on sending of SNMP traps. (A host address is also required.) If no traps are specified, they are all turned on.<br>• `snmp` - Turn on only SNMP standard traps<br>• `xkl` - XKL-specific traps (see XKL MIB Groups)<br>• `xkl-generic` - XKL-generic traps |
| **host** *`address`* | Send SNMP traps to a specific host, specified by *`address`*, which is either a hostname or an IP address. Multiple hosts may be specified, but only one per invocation of this command. |
| **host** *`address`* [*`Community Name`*] | Specify a *Community Name* to cause traps to use this community string rather than the global `community` *`string`* specified for SNMP read operations. |

## 4.4.11 Set up Remote Event Logging

```
logging
```

Logging functions are available on all DarkStar systems. Make sure that all useful notifications are enabled, so that you receive them:

- Enable system event logging by issuing the `logging` command. The console event log buffer is cleared when the system reloads, so you should direct output to a log file (i.e., syslog), as well as to the console.
- Configure SNMP to send system alerts ("traps" in SNMP) by issuing the command `snmp-server`.

**Note:** You can store log information to a syslog server and to a circular log buffer.

### 4.4.11.1 Syslog

DarkStar systems can send logging information to a syslog server.

**Note:** If a hostname is not configured, the syslogging name will use the system serial number for a name.

**Note:** Syslog in DXMOS has an offline buffer that can hold 200 log messages that will be emptied at the specified rate-limit when syslogging is configured.

The following example shows how to configure the system to send logging messages to a syslog server:

```
localhost# configure
localhost CONF# logging host address-of-syslog-server
localhost CONF# exit
localhost# write memory
Are you sure? [yes/NO] yes
localhost#
```

The following example shows how to configure the system to send periodic heartbeat "MARK" messages to a syslog collector:

```
localhost# configure
localhost CONF# logging mark syslog mark interval in minutes, (decimal number)
localhost CONF# exit
localhost# write memory
Are you sure? [yes/NO] yes
localhost#
```

When "MARK" is enabled, a line similar to the following appears in the syslog server logs at the specified interval:

```
1 2025-03-24T14:37:44.810-07:00 DMD-A - - - - (Uptime: 0:00:03:58) -- DXM MARK --
```

### 4.4.11.2 Circular Log Buffer

DarkStar systems can store log messages in a volatile circular buffer. When a circular buffer becomes full, it continues to store data by overwriting the oldest recorded messages. Therefore, a full circular buffer will only contain the most recent log messages.

The following example shows how to enable the circular log buffer:

```
localhost# configure
localhost CONF# logging buffer buffer-size-in-messages
localhost CONF# exit
```

The following example shows the contents of the log buffer.

```
localhost# show logging
Jun 10 10:38:15:954: System Warm Reload
Jun 10 10:38:15:958: Amplifier East Output EDFA: Optimal mode is Power Control with setpoint 8.5 dBm
Jun 10 10:38:16:012: Amplifier East Output EDFA: Mode is Power Control with setpoint 8.5 dBm
Jun 10 10:38:16:016: Amplifier West Output EDFA: Optimal mode is Power Control with setpoint 8.5 dBm
Jun 10 10:38:16:068: Amplifier West Output EDFA: Mode is Power Control with setpoint 8.5 dBm
Jun 10 10:38:16:097: Amplifier East Output EDFA: Alarm: Loss of signal
Jun 10 10:38:16:107: Amplifier East Output EDFA: State change: LOS
Jun 10 10:38:16:115: Amplifier West Output EDFA: Alarm: Loss of signal
Jun 10 10:38:16:123: Amplifier West Output EDFA: State change: LOS
Sep 27 15:52:57:190: System Warm Reload
Sep 27 15:52:57:407: Power Supply 1 is absent (0xB4)
Oct 5 09:09:09:793: Link Down: Management interface OSC 0
Oct 5 09:09:10:757: Link Up: Management interface OSC 0
```

### 4.4.11.3 Configure Circular Log Buffer, SNMP, and Syslog Together

The following is an example where we configure the logging buffer, SNMP, and syslog in the same configure-mode session (i.e., CONF#).

```
localhost# configure
localhost CONF# logging buffer 512
localhost CONF# snmp-server community public
localhost CONF# snmp-server host 123.123.1.99
localhost CONF# snmp-server enable traps
localhost CONF# logging host 123.123.1.99
localhost CONF# exit
localhost# write memory
Are you sure? [yes/NO] yes
localhost#
```

### 4.4.12 Verify Your Connections

```
ping, ping6
```

Send test packets to a specific IPv4 or IPv6 address. (Use the `ping6` command for IPv6 addresses.) The `ping` and `ping6` commands send five ICMP echo request packets and reports whether or not responses are received for each. An exclamation point (`!`) displays for each successful packet and a period (`.`) is displayed for each unsuccessful packet.

```
localhost# ping6 fd16:e32:da22:f01:209:5bff:fee1:5a7e
(fd16:e32:da22:f01:209:5bff:fee1:5a7e)
!!!!!
Done pinging fd16:e32:da22:f01:209:5bff:fee1:5a7e - 5 of 5 packets received
localhost# ping 123.123.1.110
```

## 4.5 Remote File Configuration

DarkStar systems offer two methods to remotely acquire a configuration file. The first method utilizes the boot program and requires some on-system setup, the second method utilizes DXMOS and requires no on-system setup.

### 4.5.1 Boot Remote File Configuration

Once the management network is provisioned, DarkStar systems are capable of remotely acquiring a configuration file via DHCP and DHCPv6, as well as TFTP for semi-automated configuration. This method of configuration is attempted when no `startup-config` file is present in flash memory or when the `boot host dhcp` command is issued and saved in `startup-config`.

In this context, the DarkStar system acts as a DHCP client and broadcasts discovery requests. The DHCP offer and subsequent download of the configuration file can be managed on a single DHCP/TFTP server or separate DHCP and TFTP servers.

To effectively use DHCP configuration, two separate files must be properly deployed on the DHCP/TFTP server(s):

- The first file is the DarkStar configuration file, which must be hosted on a TFTP server. This file can be created during manual configuration of the DarkStar system. Once a configuration file is created, it can be modified outside of the DarkStar system using any text editor.
- The second is the DHCP server configuration file, which configures the server to provide the DHCP offer when it receives a DHCP discovery request from the DarkStar system. It is essential that the information in the server configuration file offers an IP address that is in the same network as the TFTP server, and that the client identifier or source MAC address matches the DarkStar system's interface from where DHCP discovery was sent. The client identifier is generated by the MAC address of an interface, so the type value is `01`. **Note:** When the client identifier is used, `01:` will be prepended to an interface's MAC address for the client identifier in the DHCP configuration file.

When the command `boot host dhcp interface_id` is present in the startup-config file, the DarkStar Boot program will send a DHCP discovery message with the client identifier option, including the type value `01` and the interface's MAC address.

If Boot finds a `boot host dhcp` command in the startup-config file without a specified `interface_id`, then Boot broadcasts a DHCP discovery message on all active DarkStar management Ethernet modules. In each instance, the client identifier's MAC address will be the MAC address of the interface from where DHCP discovery was sent. If Boot receives no DHCP offer after 2 minutes, Boot loads DXMOS with the local configuration file (dxmos/config.dat). If no local configuration file is present, Boot loads DXMOS without a configuration.

The following example shows a portion of the required configuration of a Unix/dhcpd-based server. The following sample would be added to the server's `etc/dhcpd.conf` file:

```
host dxm-sea-01 {
    hardware ethernet 00:A0:E3:00:01:A8;
    option tftp-server-name "10.3.0.250";
    option bootfile-name "config-00.01.a8";
    next-server 10.3.0.250;
    filename "config-00.01.a8";
}
```

In the example above, `00:A0:E3:00:01:A8` is the MAC address of an active Ethernet interface that can reach the DHCP server. Static IP configuration and other configuration parameters should be included in the file `config-00.01.a8` that is placed in the TFTP server's directory. The TFTP server is specified in the `next-server` parameter.

In all cases, the DarkStar system only uses the offered IP address temporarily and then releases it after obtaining the configuration file.

If the DarkStar system is multihomed and capable of reaching DHCP servers on more than one of its connected Ethernet ports, you can specify a configuration file bound to a particular `dhcp-client-identifier` as shown in the following example. In this case, `boot host dhcp ethernet 0` should be added to the startup-config of `dxm-sea-01`, where the MAC address of Ethernet 0 on `dxm-sea-01`, which is `00:A0:E3:00:01:A6`, will be used to generate the dhcp client identifier. This modification allows the DHCPv4 server to provide a single configuration regardless of which DarkStar system management interface is used to obtain the configuration:

```
host dxm-sea-01 {
    option dhcp-client-identifier
01:00:A0:E3:00:01:A6;
    option tftp-server-name "10.3.0.250";
    option bootfile-name "config-00.01.a6";
    next-server 10.3.0.250;
    filename "config-00.01.a6";
}
```

For DHCPv6, the DHCP client identifier is a DUID-EN identifier (see RFC 3315) consisting of the EN prefix and XKL vendor identifier "00:02:00:00:52:9e:" followed by the system (Ethernet 0) MAC address. For example, a DarkStar system with the system MAC address 00:a0:e3:00:03:46 will have a DHCPv6 client identifier of 00:02:00:00:52:9e:00:a0:e3:00:03:46. For DHCPv6, both DUID-EN and the interface identifier (IAID) are sent in the request message.

```
host dxm-sea-01 {
host-identifier option dhcp6.client-id
00:02:00:00:52:9e:00:A0:E3:00:03:46;
option dhcp6.bootfile-url "tftp://[fd123:123:1::99]/
config-00.01.a6”;
}
```



*The DHCP server must directly connect to the subnet associated with the DarkStar management port, or a system on that subnet must act as a DHCP relay.*

### 4.5.2 DXMOS Remote File Configuration

With Zero Touch Provisioning, ZTP, DarkStar systems are capable of remotely acquiring a configuring file via DHCP and TFTP for an automated configuration. This method of configuration is continuously attempted when no `startup-config` file is present in flash memory and is stopped once a configuration file is acquired or a configuration file is created on-system.

In this context, the DarkStar system acts as a DHCP client and broadcasts discovery requests on every available interface. The DHCP offer and subsequent download of the configuration file can be managed on a single DHCP/TFTP server or separate DHCP and TFTP servers.

To effectively use DHCP configuration, two separate files must be properly deployed on the DHCP/TFTP server(s):

- The first file is the DarkStar configuration file, which must be hosted on a TFTP server. This file can be created during manual configuration of the DarkStar system. Once a configuration file is created, it can be modified outside of the DarkStar system using any text editor.
- The second is the DHCP server configuration file, which configures the server to provide the DHCP offer when it receives a DHCP discovery request from the DarkStar system. It is essential that the information in the server configuration file offers an IP address that is in the same network as the TFTP server, and that the client identifier or source MAC address matches the DarkStar system's interface from where DHCP discovery was sent. The client identifier is generated by the MAC address of an interface, so the type value is `01`. **Note:** When the client identifier is used, `01:` will be prepended to an interface's MAC address for the client identifier in the DHCP configuration file.

When DXMOS boots up without a configuration file on the flash file system, the system will attempt to get a remote configuration file by first turning on the DHCP client for every interface. The first interface that has the TFTP server and TFTP file location in its DHCP lease offer will be used for trying to acquire the remote configuration file.

An attempt to acquire the remote configuration file will occur when any interface acquires or renews a DHCP lease. If an attempt to acquire a remote configuration file fails, it will be silently logged and can be viewed with the `show log` command to better ascertain what went wrong before it attempts to acquire the file again. If an attempt to acquire a remote configuration file succeeds, it will be silently logged, lease-less DHCP clients will be turned off, and the remote configuration file will be applied, and saved, to the flash file system.



*If any changes are made to the configuration of the system between system startup and acquiring a remote configuration file, those changes will be lost once the acquired remote configuration file is applied. To save said changes and/or stop the automatic acquisition of a remote configuration file, execute the* `write memory` *command.*

The following example shows a portion of the required configuration of a Unix/dhcpd-based server. The following sample would be added to the server's `etc/dhcpd.conf` file:

```
host dxm-sea-01 {
    hardware ethernet 00:A0:E3:00:01:A8;
    option tftp-server-name "10.3.0.250";
    option bootfile-name "config-00.01.a8";
    next server 10.3.0.250;
    filename "config-00.01.a8";
}
```

In the example above, `00:A0:E3:00:01:A8` is the MAC address of an active Ethernet interface that can reach the DHCP server. Static IP/DHCP configuration and other configuration parameters should be included in the file `config-00.01.a8` that is placed in the TFTP server's directory. The TFTP server is specified preferably in the `tftp-server-name` (option 67) parameter or in the `next-server` parameter as a backup, and the parameters must be an IPv4 address. The TFTP file location is specified preferably in the `bootfile-name` (option 66) parameter or in the `filename` parameter as a backup.



*The DHCP server must directly connect to the subnet associated with the DarkStar management port.*

# 5

# Monitoring & System Maintenance

This chapter describes how to monitor a DarkStar system using DXMOS commands, as well updating software and replacing a power supply and fan modules.

Sections covered:


- Monitoring the DarkStar System
- System Maintenance and Updates


## 5.1 Monitoring the DarkStar System

You can monitor system health, including the state and operation of DarkStar hardware and optical components, using

- the console port and front panel LEDs,
- remote terminals,
- system and BERT logs to record status over time, and
- SNMP servers to collect and report on key system and network parameters, and status.

### 5.1.1 System Monitoring

The monitoring data provided includes the following:

- Remote observation of front panel LEDs
- Hardware temperature values
- Cooling fan operational state (including blower speeds)
- Power supply operational state
- Transceiver status
- Optical signal errors

## 5.1.2 Front Panel LEDs

This section describes the LEDs found on a front panel of a DarkStar system.

Table 5-1 shows the status indicators used for LED patterns.

**TABLE 5-1. Legend: LED Status Indicators**

| LED Status | Meaning |
|---|---|
| ○ | Steady off |
| ● | Steady on |
| ◐ | Flashing |

### 5.1.2.1 System LEDs

DarkStar system LEDs, along with the front reset button (RESET), are located between the Ethernet management ports and console port, as shown in Figure 5-1. When connected to a power source, the system's three LEDs will be green for power (PWR), amber for warning (WRN), and red for alarm (ALM). The graphic shows all the LEDs illuminated solely for illustration purposes.

**FIGURE 5-1. System LEDs and Front Reset Button**

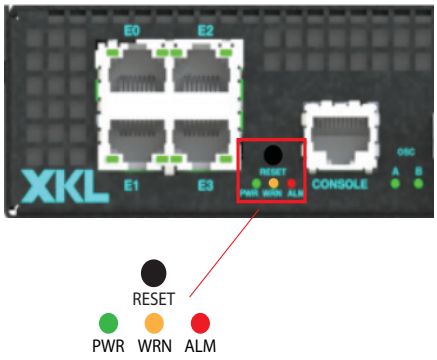


For information on the front reset button, see Boot and Recovery.

Their collective LED patterns, as shown in Table 5-2, provide system status, including environmental and boot status.

**TABLE 5-2. System LED Patterns**

| PWR (green) | WRN (amber) | ALM (red) | Meaning |
|---|---|---|---|
| ○ | ○ | ○ | No power or both power supply modules down. |
| ● | ○ | ○ | System fully operational. |
| ● | ◐ | ○ | Environmental failure.<br>Possible causes:<br>• One power supply module down or absent.<br>• Temperature alarm.<br>• One or more fan failures.<br>• Fan controller 0, 1, or 2 absent. |
| ◐ | ○ | ○ | Booting in progress. |
| ○ | ◐ | ● | Boot initialization failure.<br>Possible causes:<br>• The requested flash card may be missing.<br>• The flash card contents may be corrupt.<br>• The CPU load status may have reported a problem.<br>• The watchdog timer may have expired during the DXMOS booting process.<br>**Note:** The system may still be attempting to bring up DXMOS via auto-recovery methods. |
| ○ | ● | ● | Both flash cards are absent. |

### 5.1.2.2 Green LEDs Representing Optical Power

**OSC LEDs** report the state of network connectivity between the management planes in DarkStar systems and illuminate upon establishment of that connectivity. The DMD-A, DLA, and DQM10 systems all feature OSC LEDs, the number of which depend on the model.

Figure 5-2 illustrates an example of OSC LEDs for OSC channels in a typically-configured DMD-A system with Line Protection. Line Protection LEDs remain on, unless a problem, such as a fiber break, occurs.

**FIGURE 5-2. OSC LEDs in DMD-A with Line Protection**

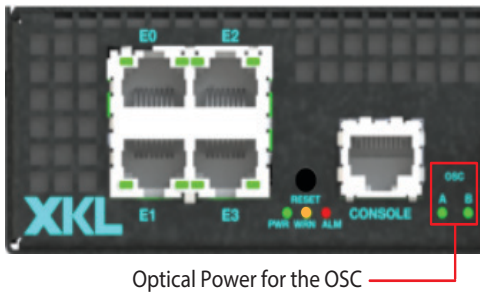


**Wave LEDs** are featured on transponder systems, while **Line LEDs** are featured on muxponder systems.

Example: For the DQT10, there are 3 wave LEDS, as shown in Figure 5-3; one each for waves 0-11, 12-23, and 24-35.

**FIGURE 5-3. Wave LEDs in a DQT10**

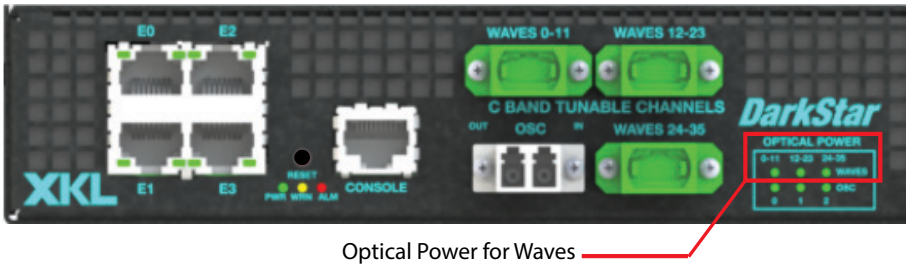


For the DQT400-4 system, there are 4 LEDs, one each for waves 0, 1, 2, and 3. The DQT400-4 system is shown in Figure 5-4.

**FIGURE 5-4. Wave LEDs in a DQT400-4**

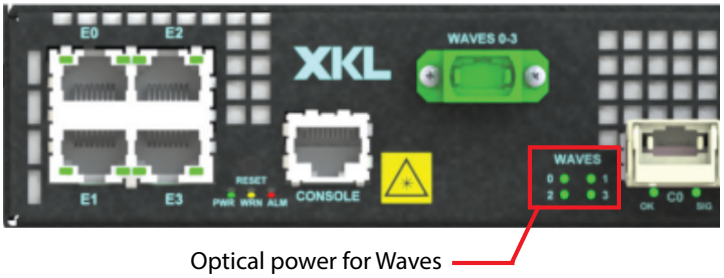


Lastly, for the DQM10, there is 1 line LED that represents all the waves in the system.

For any of these products, the LED logic is quite simple. Regardless of how many waves an LED represents, if just one wave is not receiving optical power (i.e., the Loss of Signal [LOS] alarm) then the associated LED will be off. Conversely, an LED is illuminated if all of the associated waves have their LOS alarm deasserted (i.e., they are receiving optical power).

**Client LEDs**, OK and SIG, can be found under each client transceiver port in the muxponder and transponder systems, as shown in Figure 5-5. The LED logic for all of these products is the same.

The SIG LED illuminates if the transceiver (plugged into one of the client ports, such as "C0") is receiving optical power; or, if it is a multi-lane transceiver, has at least one lane receiving optical power.

The OK LED Illuminates if the SIG LED is illuminated and the transceiver is not in a transmit fault condition; or, if it is a multi-lane transceiver, has at least one lane not in a transmit fault condition.

**FIGURE 5-5. Client LEDs**

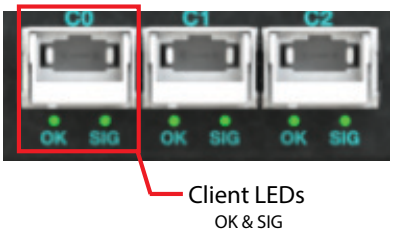


### 5.1.2.3 Green LEDs Representing Line Active

Figure 5-6 illustrates the Line Active LEDs for a DMD-A with Line Protection. A green LED indicates which of the two lines, A or B, is active, so only one LED is on at any given time. (The graphic shows both LEDs illuminated solely for illustration purposes.)

**FIGURE 5-6. Line Active LEDs in DMD-A with Line Protection**



### 5.1.2.4 Amplifier LEDs for DMD-A and DLA and DUA

Figure 5-7 illustrates the amp (EDFA) status LEDs in a DMD-A system with Line Protection.

**FIGURE 5-7. Amp Status LEDs in DMD-A with Line Protection**




The DMD-A and DLA systems have their own specific LED patterns based on green for operational status (OK), amber for warning (WRN), and red for alarm (ALM), as shown in Table 5-3. For the meaning of the XKL acronyms in this table, see Amplifier Alarms.

**TABLE 5-3. EDFA Alarm States and LEDs (DLA, DMD-A, DUA systems only) †**

| OK (green) | WRN (amber) | ALM (red) | Logic Condition | CLI/SNMP | Priority (highest =1) |
|---|---|---|---|---|---|
| ○ | ○ | ○ | (Amplifier Reset) or (Amplifier Booting) | Reset | 1 |
| ○ | ○ | ● | ((AOP) and (Administratively enabled) and (HCT or LCT or APT or HPB or HBR)) OR<br>((Administratively enabled) & (pump current == 0)) and (not LOS)) or (NSC) | Alarm | 2 |
| ○ | ● | ○ | ((AOP) and (Administratively enabled)) xor (HCT or LCT or APT or HPB or HBR) | Warning | 3 |
| ○ | ● | ○ | LOS | LOS | 4 |
| ◐ | ○ | ○ | (Administratively disabled) | Down | 5 |
| ● | ○ | ○ | (No alarms) and (Administratively enabled) and (pump current (pump, NOT pump ild))>0) | Up | 6 |

†For versions prior to v4.6, please see the Archived CCC Based DLA/DMD-A page

The acronyms for these alarms, as referenced in the EDFA manufacturer user guide, are different than the XKL acronyms. See the Glossary in the Systems Guide for details on this.

These are XKL acronyms:

- LOS = Loss of Signal
- AOP = Abnormal Output Power (this is referred to as LOP in the EDFA, Loss of Output Power)
- HCT = High Case Temperature
- LCT = Low Case Temperature
- APT = Abnormal Pump Temperature
- HPB = High Pump Bias current
- HBR = High Back Reflections
- NSC = No Serial Communications

### 5.1.3 Amplifier Alarms

In addition to loss of signal (LOS) alarms, there are several different types of amplifier/line alarms that you may see in a report generated by the `show amplifier all` or `show amplifier [amplifier-label]` command. Table 5-4 lists these types of alarms and their corresponding code.

**TABLE 5-4. Amplifier Alarms**

| Abbreviation on Report | Name | Meaning |
|---|---|---|
| LOS | Loss of signal | Input power is below the LOS threshold, indicating that the incoming signal is not present or is below the expected power level. |
| AOP | Abnormal output power | The output power deviates by more than 3dB from the expected level, or the output is muted. |
| HCT | High case temperature | The case temperature is higher than the recommended maximum temperature (i.e., at or above the "high" threshold), which can affect the expected operation of the system and shorten EDFA life. |
| LCT | Low case temperature | The case temperature is lower than the recommended minimum temperature (i.e., at or below the "low" threshold), which can affect the expected operation of the system. |
| APT | Abnormal pump temperature | The pump temperature deviates from the setpoint (currently and typically 35° C) by more than the Pump Temperature Threshold<br>A Thermo-Electric Cooler (TEC) is used to control the Pump Laser's temperature. |
| HPB | High pump bias current | The pump bias current has risen to above the end-of-life current specified by the manufacturer. This indicates that the pump laser has reached end-of-life. |
| HBR | High back reflection | The level of back-reflection is high (i.e., exceeding the specified threshold), perhaps indicating that the fiber is either disconnected or damaged.<br>**Note:** Amplifiers capable of exceeding +21.5 dBm output levels that can result in eye or other bodily injury, or equipment damage, will trigger an `Eye-Safe` fault condition and subsequent automatic power reduction to an `Eye-Safe` level. Distinguish `Eye-Safe` (and HBR) vs. only HBR via the `MST` query; a response of `ES` indicates an amplifier supporting `Eye-Safe`. |
| COM | Common | Common alarm that is active when any internal alarm is active (i.e., LOS, AOP, HCT, LCT, APT, HPB, HBR).<br>**Note:** Some EDFAs do not raise Common Alarm for APT. |
| NSC | No Serial Communications | This indicates that the DXMOS system cannot communicate with the amplifier over the private serial communications channel which it uses to control and read the status of the specific amplifier. |

### 5.1.4 System "show" Commands

DarkStar `show` commands, such as those shown in Table 5-5, allow you to monitor system activity in any mode: disable (`> show`), enable (`# show`), or configure (`CONF# do show`). For a complete listing of `show` commands, see the Command Reference on the XKL website.

**TABLE 5-5. Show Modules, Show Management, and Show Environment Commands**

| Command | Description |
|---|---|
| **show led** | Displays system LED patterns at a remote operator console including environmental and boot status. |
| **show environment temp** | Displays temperatures and operational temperature ranges for various DarkStar components. |
| **show environment fan** | Displays cooling fan module parameters. |
| **show environment power** | Displays power supply module parameters. |
| **show equalizer** | Displays DGE/OCM device status and settings. |
| **show modules** | Displays current operational warning and alarm status for client and wave transceivers. |
| **show management** | Displays Ethernet interface parameters. |
| **show amplifier** | Displays status of amplifiers, settings, and alarms. |
| **show vifs** | Displays status report on the traffic flow over a physical client transceiver. |

#### 5.1.4.1 Check System Status Via LEDs

The pattern of LEDs on the front panel of DarkStar systems indicates system status, including environmental and system initialization status. The `show led` command shows these LED patterns at a remote operator console. The example below is for a DQT400-4.

```
localhost# show led verbose

System Status:
    | PWR | WRN | ALM |
    |green|amber| red |
    |-----|-----|-----|
    | on  |     |     |

System Status Info:
   System fully operational

Ethernet Link:
    |   E0    |   E2    |
    |---------|---------|
    |on(green)|         |

    |   E1    |   E3    |
    |---------|---------|
    |         |         |

Line/Wave Ports Info:
  Wave 0: on
  Wave 1: on
  Wave 2: on
  Wave 3: on



Client Ports:
    |    C0     |    C1     |    C2     |    C3     |
    | Ok  | Sig | Ok  | Sig | Ok  | Sig | Ok  | Sig |
    |-----|-----|-----|-----|-----|-----|-----|-----|
    |     |     |     |     |     |     |     |     |
```

### 5.1.4.2 Verify System Temperatures

DXMOS actively monitors system temperatures and will issue console warning messages and log events if temperatures are outside the normal operating range.

The `show environment temp` command displays a series of temperature thresholds for various components in a DarkStar system, as well as the current temperature reported by each component. The temperature thresholds define the safe operating range of each component.

**TABLE 5-6. Temperature Thresholds**

| Threshold | Description |
|---|---|
| `Low Alarm` | Temperature has dropped below regular operational parameters for that component. Continued operation at this temperature may damage the component. The component may need to be replaced. |
| `Low Warning` | Temperature of system is falling toward levels that may cause damage to a component, but have not yet exceeded safe levels. Warnings indicate that there might be a problem with the component and that it should be closely monitored. |
| `Fan Ctrl` | Under normal circumstances DXMOS will control the fans to maintain components at or below this temperature. |
| `High Warning` | Temperature of system is rising toward levels that may cause damage to a component, but have not yet exceeded safe levels. Warnings indicate that there might be a problem with the component and that it should be closely monitored. |
| `High Alarm` | Temperature has risen above regular operational parameters for that component. Continued operation at this temperature may damage the component. The component may need to be replaced. |
| `High Critical` | Temperature of system has exceeded safe levels. The component will be shut off immediately to prevent possible damage to other DarkStar components |

**Note:** The fan control algorithm monitors the temperature sensors provided by individual components in the DarkStar system. If critical temperature sensor-thresholds are reached, the DarkStar system will automatically power off. The DarkStar system will restore normal power when the sensors have cooled below the critical temperature threshold.

Issue the `show environment temp` command to monitor temperature values. The command shows the temperatures of various components and locations inside the DarkStar system.

The following example is the output from the `show environment temp` command of a DMD-A dual.

```
localhost# show environment temperature

Temperature (C)              Curr  Low   Low   Fan   High  High  High
Sensor Id                    Temp  Alrm  Warn  Ctrl  Warn  Alrm  Crit
-----------                  ----  ----  ----  ----  ----  ----  ----
OSC 1                          27     0     5    50    65    70    80
OSC 0                          31     0     5    50    65    70    80
Fan 0 Outlet                   25     0     5  none    60    65    70
Fan 2 Outlet                   26     0     5  none    60    65    70
DAMP Board                     27     0     5  none    60    65    70
CMD Outlet                     34     0     5  none    60    65    70
CMD Board                      45     0     5  none    60    65    70
CMD FPGA                       59     0     5    80    95   100   115
C1UB Board                     28     0     5  none    60    65    70
East Input EDFA                22    -5     0    50    65    70    80
West Input EDFA                28    -5     0    50    65    70    80
```

### 5.1.4.3 Verify Cooling Fan Operation

There are two or three fan modules, depending on the system type, and each fan has two blowers. SNMP reports automatically on fan changes of state and alarms, and you can check on fan status manually by issuing the `show environment fans` command.

Automatic fan control mode is used to control blower speeds by default. Under normal system operation, DXMOS automatically adjusts blower speeds to hold temperature values of components and locations at or below their target temperature values. Target temperature values are reported by the `show environment temperature` command in the `Fan Ctrl` column. See the description of `Fan Ctrl` in Table 5-6.

Fan modules can be replaced one at a time while the DarkStar system remains powered and operational.

The following example is the output from the `show environment fans` command of a DMD-A dual.

```
localhost# show environment fans

Fan 0, is present
 Position: Leftmost (as viewed from rear)
 Assembly Part Number: N/A
 Control Mode: Auto
Blower 0, is present
 Position: Left (as viewed from rear)
 Minimum speed is 78 RPS, Maximum speed is 305 RPS
 Target speed is 1 percent, Last read 84 RPS
 No Alarms
Blower 1, is present
 Position: Right (as viewed from rear)
 Minimum speed is 82 RPS, Maximum speed is 304 RPS
 Target speed is 1 percent, Last read 85 RPS
 No Alarms
Fan 2, is present
 Position: Rightmost (as viewed from rear)
 Assembly Part Number: N/A
 Control Mode: Auto
Blower 0, is present
 Position: Left (as viewed from rear)
 Minimum speed is 83 RPS, Maximum speed is 305 RPS
 Target speed is 1 percent, Last read 91 RPS
 No Alarms
Blower 1, is present
 Position: Right (as viewed from rear)
 Minimum speed is 82 RPS, Maximum speed is 303 RPS
 Target speed is 1 percent, Last read 89 RPS
 No Alarms
```

### 5.1.4.4 Verify Power Supply State

There are two power supply modules in the system, and the system will operate on just one module (the modules are 1+1 redundant). SNMP reports automatically on power changes of state and on power alarms, and you can check on power status manually by issuing the `show environment power` command.

Power supply modules can be replaced one at a time while the DarkStar system remains powered and operational.

The following example is the output from the `show environment power` command of a DMD-A dual.

```
localhost# show environment power
Power Supply 0 is present, with status: Normal/On
  Position:      Left (as viewed from rear)
  Type:          Common Redundant
  Manufacturer:  bel
  Serial Number: PEC0550NA200900057
  Part Number:   PEC550-12-074NA
  Revision:      V00
      Output Voltage:    12.277 V
      Output Current:     4.601 A
      Fan Speed:           6756 RPM
      Max Output Power: 550.000 W
  Status Word: 0x0000

Power Supply 1 is present, with status: Normal/On
  Position:      Right (as viewed from rear)
  Type:          Common Redundant
  Manufacturer:  bel
  Serial Number: PEC0550NA200900058
  Part Number:   PEC550-12-074NA
  Revision:      V00
      Output Voltage:    12.263 V
      Output Current:     5.406 A
      Fan Speed:           6820 RPM
      Max Output Power: 550.000 W
  Status Word: 0x0000


Power Regulators:
Board Name  RefD   Vnom (V)  Vout (V)  Iout (A)  Power Good  Alert Signal
----------  -----  --------  --------  --------  ----------  ------------
CMD         U2001     2.500     2.529     0.500         N/A           Off
CMD         U2100     0.950     0.954     0.812         N/A           Off
CB          U7301     1.200       N/A       N/A        True           Off
C1UB         U901     3.300     3.299     0.062        True           Off
PS0A         U200     3.600     3.578     0.062         N/A           Off
PS1A         U200     3.600     3.580     0.062         N/A           Off
CB          U7300     1.800     1.792    10.000        True           Off
CB          U7302     0.900     0.894    12.687        True           Off
CB          U7303     0.900     0.902    13.812        True           Off
CMD         U2000     3.300     3.315     0.062         N/A           Off
CMD         U2002     1.800     1.777     1.062         N/A           Off
C1UB         U900     5.000     5.023     0.062        True           Off
CMD         U2003     1.200     1.204     0.562         N/A           Off
CMD         U2101     0.900     0.919     2.625         N/A           Off
```

```
CB          U7203     2.500     2.563     1.187        True          Off
CB          U7200     3.300     3.328     1.937        True          Off
CB          U7201     3.300     3.333     9.937        True          Off
```

#### 5.1.4.5 Verify Module and Management Status

Use the `show modules summary` command to monitor all included module types (e.g., client, osc, trunk or wave transceivers) or the `show management summary` command to monitor all included management interface types (e.g., Ethernet, loopback, osc, or switch).

To report in detail on a particular module type (i.e., client, osc, trunk or wave transceiver), use the `show modules [module-identifier] verbose` command; or, in detail for all included module types, the `show modules all verbose` command. Similarly, to report in detail on a particular management interface type (i.e., Ethernet, loopback, osc, or switch), use the `show management <interface type>` command; or, in detail for all included management interface types, the `show management all` command.

The following examples from a DMD-A dual show the output of the `show modules summary` and the `show management summary` commands.

`localhost#` **`show modules`** summary

```
 Interface   Admin  Line    Rate       RxPow     Ch  Transceiver  Last Line Chg
------------ ----- ------- -------- ----------- ---- -----------  -------------
OSC West     Down  Up      100Mb/s    -10.7 dBm N/A  N/A          00d 00:10:01
OSC East     Down  Up      100Mb/s     -8.6 dBm N/A  N/A          00d 00:10:01
```

`> means the line state has not changed since DXMOS was restarted.`

`localhost#` **`show management`** summary

```
Interface            Admin  Line   Type      IP Address
-------------------- ------ ------ --------- ---------------------------------
Ethernet 0           Up     Up     LAN       10.15.1.137/16
OSC 0 [OSC West]     Down   Up     LAN
OSC 1 [OSC East]     Down   Up     LAN
```

For a detailed status report on the client 2 transceiver, use the command `show modules client 2 verbose`, as shown in the next example from a DQT10 system.

`localhost#` **`show modules client`** *2* verbose

```
Detailed information for transport interface Client 2
 Description: ..................... Seattle_to_Redmond
 Vendor: .......................... AVAGO
 OUI: ............................. 00:17:6A
 Part Number: ..................... AFBR-79EIDZ
 Manufacturing Date: .............. 140501
 Serial Number: ................... QE184806
 Module Type: ..................... QSFP+
 I2C Address: ....................  M 1, CSel 2, Bus  1, Slave  80.
 Tx CDR Version: .................. 2
 Tx CDR Firmware: ................. 3-9-0-A
 Rx CDR Version: .................. 2
 Rx CDR Firmware: ................. 3-9-0-A
 General Status:
   Administrative State: ........... Up
```

```
  Last Cleared: ..................... 00d 00:01:58
  I2C Transaction Error Count: ..... 0
Sensor Readings and Thresholds:
  Laser Temperature: ................ 26 C
    High Alarm: ..................... 75 C
    High Warning: ................... 70 C
    Low Warning: .................... 0 C
    Low Alarm: ...................... -4 C
  +3.3V Supply Voltage: ............. 3.316 V
    High Alarm: ..................... 3.630 V
    High Warning: ................... 3.465 V
    Low Warning: .................... 3.135 V
    Low Alarm: ...................... 2.970 V
  Rx Laser Input Power: ............. Reported By Lane (below)
    High Alarm: ..................... 3.3 dBm
    High Warning: ................... 2.3 dBm
    Low Warning: .................... -9.5 dBm
    Low Alarm: ...................... -13.5 dBm
  Tx Laser Output Power: ............ Reported By Lane (below)
    High Alarm: ..................... -40.0 dBm
    High Warning: ................... -40.0 dBm
    Low Warning: .................... -40.0 dBm
    Low Alarm: ...................... -40.0 dBm
  Tx Laser Bias Current: ............ Reported By Lane (below)
    High Alarm: ..................... 10.0 mA
    High Warning: ................... 9.5 mA
    Low Warning: .................... 1.0 mA
    Low Alarm: ...................... 0.5 mA

Lane 0:
  Description: ...................... N/A
  Signal Type: ...................... 10G Ethernet
  Wavelength: ....................... 850.00 nm
  General Status:
    Transmitter: .................... Disabled
    Receiver: ....................... LOS
    Total Down/Error Time: ......... 00d 00:02:26
    Time Since Last State Change: .. >00d 00:02:43
    Time Since Last Cleared: ....... 00d 00:01:58
    Idle Tx/Mute: ................... Idle Mute
  Sensor Status:
    Rx Laser Input Power: ........... Low Alarm
    Tx Laser Output Power: ......... OK
    Tx Laser Bias Current: ......... OK
  Sensor Readings and Thresholds:
    Rx Laser Input Power: ........... -40.0 dBm
    Tx Laser Output Power: ......... -40.0 dBm
    Tx Laser Bias Current: ......... 0.0 mA
  BERT Status:
    Receive: ........................ Off
    Transmit: ....................... Off

  Rx Cdr (Client CDR 1 (Rx) /11):
    Status: ......................... 2a28
```

```
    CTLE Adaptation: ............... Not Started
    Equalizer Calibration: ......... Complete
    Tx Term Calibration: ........... Complete
    Ring Osc Calibration: .......... Complete
    Signal Detected: ............... No
    Skew Calibration: .............. Complete
    DFE Adaptation: ................ Not Started
    PRBS Generate: ................. Off
    PRBS Pattern-Check: ............ Off
  Tx Cdr (Client CDR 0 (Tx) /2):
    Status: ........................ 2a28
    CTLE Adaptation: ............... Not Started
    Equalizer Calibration: ......... Complete
    Tx Term Calibration: ........... Complete
    Ring Osc Calibration: .......... Complete
    Signal Detected: ............... No
    Skew Calibration: .............. Complete
    DFE Adaptation: ................ Not Started
    PRBS Generate: ................. Off
    PRBS Pattern-Check: ............ Off

Lane 1:
  Description: ..................... N/A
  Signal Type: ..................... 10G Ethernet
  Wavelength: ...................... 850.00 nm
  General Status:
    Transmitter: ................... Disabled
    Receiver: ...................... LOS
    Total Down/Error Time: ......... 00d 00:02:26
    Time Since Last State Change: .. >00d 00:02:43
    Time Since Last Cleared: ....... 00d 00:01:58
    Idle Tx/Mute: .................. Idle Mute
  Sensor Status:
    Rx Laser Input Power: .......... Low Alarm
    Tx Laser Output Power: ......... OK
    Tx Laser Bias Current: ......... OK
  Sensor Readings and Thresholds:
    Rx Laser Input Power: .......... -40.0 dBm
    Tx Laser Output Power: ......... -40.0 dBm
    Tx Laser Bias Current: ......... 0.0 mA
  BERT Status:
    Receive: ....................... Off
    Transmit: ...................... Off

  Rx Cdr (Client CDR 1 (Rx) /10):
    Status: ........................ 1a28
    CTLE Adaptation: ............... Not Started
    Equalizer Calibration: ......... In Progress
    Tx Term Calibration: ........... Complete
    Ring Osc Calibration: .......... Complete
    Signal Detected: ............... No
    Skew Calibration: .............. Complete
    DFE Adaptation: ................ Not Started
    PRBS Generate: ................. Off
```

```
    PRBS Pattern-Check: ............ Off
  Tx Cdr (Client CDR 0 (Tx) /3):
    Status: ........................ 2a28
    CTLE Adaptation: ............... Not Started
    Equalizer Calibration: ......... Complete
    Tx Term Calibration: ........... Complete
    Ring Osc Calibration: .......... Complete
    Signal Detected: ............... No
    Skew Calibration: .............. Complete
    DFE Adaptation: ................ Not Started
    PRBS Generate: ................. Off
    PRBS Pattern-Check: ............ Off

Lane 2:
  Description: ..................... N/A
  Signal Type: ..................... 10G Ethernet
  Wavelength: ...................... 850.00 nm
  General Status:
    Transmitter: ................... Disabled
    Receiver: ...................... LOS
    Total Down/Error Time: ......... 00d 00:02:26
    Time Since Last State Change: .. >00d 00:02:43
    Time Since Last Cleared: ....... 00d 00:01:58
    Idle Tx/Mute: .................. Idle Mute
  Sensor Status:
    Rx Laser Input Power: .......... Low Alarm
    Tx Laser Output Power: ......... OK
    Tx Laser Bias Current: ......... OK
  Sensor Readings and Thresholds:
    Rx Laser Input Power: .......... -40.0 dBm
    Tx Laser Output Power: ......... -40.0 dBm
    Tx Laser Bias Current: ......... 0.0 mA
  BERT Status:
    Receive: ....................... Off
    Transmit: ...................... Off

  Rx Cdr (Client CDR 1 (Rx) /9):
    Status: ........................ 2a28
    CTLE Adaptation: ............... Not Started
    Equalizer Calibration: ......... Complete
    Tx Term Calibration: ........... Complete
    Ring Osc Calibration: .......... Complete
    Signal Detected: ............... No
    Skew Calibration: .............. Complete
    DFE Adaptation: ................ Not Started
    PRBS Generate: ................. Off
    PRBS Pattern-Check: ............ Off
  Tx Cdr (Client CDR 0 (Tx) /0):
    Status: ........................ 2a28
    CTLE Adaptation: ............... Not Started
    Equalizer Calibration: ......... Complete
    Tx Term Calibration: ........... Complete
    Ring Osc Calibration: .......... Complete
    Signal Detected: ............... No
```

```
    Skew Calibration: ..............  Complete
    DFE Adaptation: ................  Not Started
    PRBS Generate: .................  Off
    PRBS Pattern-Check: ............  Off

Lane 3:
  Description: ....................  N/A
  Signal Type: .....................  10G Ethernet
  Wavelength: ......................  850.00 nm
  General Status:
    Transmitter: ...................  Disabled
    Receiver: ......................  LOS
    Total Down/Error Time: .........  00d 00:02:27
    Time Since Last State Change: ..  >00d 00:02:44
    Time Since Last Cleared: .......  00d 00:01:59
    Idle Tx/Mute: ..................  Idle Mute
  Sensor Status:
    Rx Laser Input Power: ..........  Low Alarm
    Tx Laser Output Power: .........  OK
    Tx Laser Bias Current: .........  OK
  Sensor Readings and Thresholds:
    Rx Laser Input Power: ..........  -40.0 dBm
    Tx Laser Output Power: .........  -40.0 dBm
    Tx Laser Bias Current: .........  0.0 mA
  BERT Status:
    Receive: .......................  Off
    Transmit: ......................  Off

  Rx Cdr (Client CDR 1 (Rx) /8):
    Status: ........................  2a28
    CTLE Adaptation: ...............  Not Started
    Equalizer Calibration: .........  Complete
    Tx Term Calibration: ...........  Complete
    Ring Osc Calibration: ..........  Complete
    Signal Detected: ...............  No
    Skew Calibration: ..............  Complete
    DFE Adaptation: ................  Not Started
    PRBS Generate: .................  Off
    PRBS Pattern-Check: ............  Off
  Tx Cdr (Client CDR 0 (Tx) /1):
    Status: ........................  2a28
    CTLE Adaptation: ...............  Not Started
    Equalizer Calibration: .........  Complete
    Tx Term Calibration: ...........  Complete
    Ring Osc Calibration: ..........  Complete
    Signal Detected: ...............  No
    Skew Calibration: ..............  Complete
    DFE Adaptation: ................  Not Started
    PRBS Generate: .................  Off
    PRBS Pattern-Check: ............  Off


Note: '>' means knowledge of elapsed time doesn't extend into past beyond number
shown.
```

### 5.1.4.6 Verify Amplifier Status

Use the `show amplifier` command to report summarizing status of all amplifiers in the system. To generate a detailed report, use the `show amplifier all` command.

**Note:** The `show amplifier` command is the same as the `show amplifier summary` command.

The following example is the output from the `show amplifier summary` command of a DLA.

```
localhost# show amplifier summary
```

```
                                Admin  Ctrl   Control   RxPow   TxPow  Module
Amplifier               Role    State  Mode   Setpoint   (dBm)   (dBm)  State
----------------------  ------- -----  ----  ---------  ------  ------ ------
East Input EDFA         Preamp  Down   D           N/A    -6.9   -40.0 Down
East Output EDFA        Booster Down   D           N/A   -50.0   -40.0 LOS
West Input EDFA         Preamp  Down   D           N/A   -12.7   -40.0 Down
West Output EDFA        Booster Down   D           N/A   -43.1   -40.0 LOS
```

For a detailed status report on the amplifiers, use the `show amplifier all` command, as shown in the next example from a DLA. Note that each of these EDFAs is in an LOS state—Loss of Signal. When an EDFA is in this state, it will automatically disable the output power (disable the pump) of the EDFA.

The Signal Output Power is the Total Output Power minus the Amplified Spontaneous Emission that is added from the pump of the amplifier. The Signal Output Power is expected to be in the APC Setpoint Min/Max Range when the Control Mode of the amplifier is in APC mode. The Signal Gain is the Signal Output Power minus the Input Power. The Signal Gain is expected to be the AGC Setpoint Min/Max Range when the Control Mode of the amplifier is in AGC mode.

localhost# `show amplifier all`

Detailed information for Amplifier East Output EDFA

```
  Module is administratively down
  Module Status
    State ................. LOS
    Control mode ........... Automatic (Power Control)
    Channel-count ..........      1
    Calculated Setpoint ....    8.5 dBm
    Applied Setpoint .......    8.5 dBm
    Case temperature .......   25.9 C
  Pump Status
    Pump bias current ......    0.3 mA (Disabled)
    Pump EOL bias current ..  896.2 mA
    Pump temperature .......   25.0 C
  Signal Levels
    Input power ............  -42.2 dBm
    Total output power .....  -40.0 dBm
    Signal output power ....  -40.0 dBm
    Signal gain ............    0.0 dB
  Alarms
    LOS/Loss of signal
  Module Identification
    Role ................... Booster
    Path ................... East midstage input to East line output
    AGC Setpoint Min/Max ...   17.0/29.0 dB
    APC Setpoint Min/Max ...  -10.0/20.0 dBm
```

```
Detailed information for Amplifier West Output EDFA

  Module is administratively down
  Module Status
    State ................. LOS
    Control mode ........... Automatic (Power Control)
    Channel-count ..........      1
    Calculated Setpoint ....    8.5 dBm
    Applied Setpoint .......    8.5 dBm
    Case temperature .......   25.1 C
  Pump Status
    Pump bias current ......    0.0 mA (Disabled)
    Pump EOL bias current ..  918.7 mA
    Pump temperature .......   25.0 C
  Signal Levels
    Input power ............  -45.6 dBm
    Total output power .....  -40.0 dBm
    Signal output power ....  -40.0 dBm
    Signal gain ............    0.0 dB
  Alarms
    LOS/Loss of signal
  Module Identification
    Role ................... Booster
    Path ................... West midstage input to West line output
    AGC Setpoint Min/Max ...   17.0/29.0 dB
    APC Setpoint Min/Max ...  -10.0/20.0 dBm
```

### 5.1.4.7 Verify vifs status

For a status report on the traffic flow over a physical client module, use the command `show vifs client n`, as shown in the next example from a DQT100 system. The first sample is a summary report.

```
localhost# show vifs client 0

Client 0 (lc11.c0_0):
  Summary Information:
    Nominal Rate: ............. 10G
    Priority Class: ........... 2
  Summary Status:
    Administrative Status: .... OK
    Rx Status: ................ OK
    Tx Status: ................ OK
    Module Status: ............ OK
  Counters:
    Rx Frames Accepted: .......  914e06  (100.0%)
    Rx Frames Dropped: ........       0  (  0.0%)
    Tx Frames Accepted: .......  914e06  (100.0%)
    Tx Frames Dropped: ........       0  (  0.0%)
  Module Lane Map:
    VIF/   - Module/  Status    RxStatus  RxPow   TxStatus  TxPow    Ch/Lambda
    Lane     Lane                          (dBm)             (dBm)        (nm)
    ------------------------------------------------------------------------
      C0/0 -   CM0/0  OK        OK           0.1  OK          -2.2     850 nm
```

The following example, also from the DQT100 system, is with the added `verbose` parameter.

```
localhost# show vifs client 0 verbose

Client 0 (lc11.c0_0):
  Summary Information:
    Nominal Rate: ............. 10G
    Priority Class: ........... 2
  Summary Status:
    Administrative Status: .... OK
    Rx Status: ................ OK
    Tx Status: ................ OK
    Module Status: ............ OK
  Internal Status:
    Rx Ready: ................. OK
    Rx Locked to Data: ........ OK
    Rx Sync: .................. OK
    Tx Ready: ................. OK
  Module Status:
    Rx LOS: ................... OK
    Rx LOL: ................... OK
    Rx Power: ................. OK
    Tx Disabled: .............. OK
    Tx Fault: ................. OK
    Tx LOS: ................... OK
    Tx LOL: ................... OK
    Tx Power: ................. OK
  Counters:
```

```
  Rx Frames Accepted: .......  720e06  (100.0%)
  Rx Frames Dropped: ........       0  (  0.0%)
  Rx Frames Malformed: ......       0  (  0.0%)
  Rx Frames Total: ..........  720e06
  Tx Frames Accepted: .......  720e06  (100.0%)
  Tx Frames Dropped: ........       0  (  0.0%)
  Tx Frames Total: ..........  720e06
Module Lane Map:
  VIF/   - Module/  Status    RxStatus  RxPow   TxStatus  TxPow   Ch/Lambda
  Lane     Lane                         (dBm)             (dBm)       (nm)
  ------------------------------------------------------------------------
    C0/0 -   CM0/0  OK        OK           0.1  OK          -2.2     850 nm
Lane Power Thresholds (dBm):
  VIF/    | RxLow   RxLow   RxHigh  RxHigh | TxLow   TxLow   TxHigh  TxHigh
  Lane    | Alarm   Warn    Warn    Alarm  | Alarm   Warn    Warn    Alarm
  -------|--------------------------------|--------------------------------
    C0/0 |  -13.5    -9.5     2.3     3.3 | <-40.0  <-40.0  <-40.0  <-40.0
Lane Tuning Bounds:
  VIF/    | Minimum  Minimum  Minimum | Maximum  Maximum  Maximum | Width
  Lane    |  (nm)     (GHz)   Channel |  (nm)     (GHz)   Channel | (GHz)
  -------|---------------------------|---------------------------|------
    C0/0 |       -        -        - |       -        -        - |   0.0
```

### 5.1.5 Error Detection

Error detection is at the physical layer of the network stack. DarkStar systems rely on signal integrity indicators from the transceiver interfaces and Clock and Data Recovery (CDR) circuitry to monitor and detect signal errors.

The most common indicators used to monitor the integrity of incoming optical signals, in order of precedence, are:

- **Loss of Signal (LOS):** The receive optical power of a DarkStar transceiver asserts an LOS when the incoming signal level falls below a threshold. Threshold levels are not configurable and are transceiver specific.
- **Loss of Lock (LOL):** DarkStar systems may have Clock and Data Recovery (CDR) circuitry. If equipped, and the CDR circuitry fails to lock on a signal, the DarkStar system may report LOL against the transceiver or interface. LOL may indicate a mismatch between the actual signal and the assigned encapsulation, and can occur in the receive or transmit direction.

Use the `show modules` command to view the line status of transport interfaces and other fault conditions that can interfere with data integrity.

### 5.1.6 SNMP Traps

RFC 1213 defines the standard SNMP MIB format and the mandatory "public" SNMP objects and groups. The XKL MIB also defines the types of XKL-specific traps. For details see the XKL MIB on the XKL website. XKL-specific SNMP traps are listed in the Command Reference.

**Note:** DarkStar systems support both SNMPv1 and SNMPv2c, including the following operations:

- GetRequest
- GetNextRequest
- GetBulkRequest
- SNMPv2 Trap

**TABLE 5-7. XKL MIB Groups**

| Object Group | Description |
|---|---|
| SysOS | Operating System information |
| Transport | Transport interface definition and environmental factors. |
| Hardware Components | Fan and power supply module configuration and status. |
| Crossbar Switch Complex | Switch connection status. |
| Sensor | Power and temperature sensor readings. |
| Protection Group | APP group configurations, status, and recent switching history. Protection status and active path. |
| EDFA | EDFA amplification configuration and optical/electrical status. |
| OTDR Latest Measurement | Readings of previously exercised OTDR measurements. |

The following MIB example shows how, if you have enabled traps and configured your monitoring system, you can be warned of a sensor temperature change (via the XKL trap `xklTempStatusChange`) and can monitor the Celsius temperature at that point (via the XKL object `xklSensorTemp`).

```
xklSensorTemp OBJECT-TYPE
    SYNTAX  Integer32
    MAX-ACCESS  read-only
    STATUS  current
    DESCRIPTION
"Temperature of the sensor (Celsius)"
    ::= { xklSensorEntry 3 }
```

The trap `xklTempStatusChange` notifies a sensor temperature change event. Note that this trap can be triggered by any of the sensor objects `xklSensorDescription`, `xklSensorTemp`, or `xklSensorStatus`.

```
xklTempStatusChange NOTIFICATION-TYPE
    OBJECTS { xklSensorIndex, xklSensorDescription, xklSensorTemp,
xklSensorStatus }
    STATUS  current
    DESCRIPTION
"Temperature status has changed"
    ::= { xklProTraps 6 }
```

### 5.1.7 idle-mute

DarkStar systems use `idle-mute` to manage signal error states. For more information, refer to the Command Reference on the XKL website.

### 5.1.8 BERT Logging



***Ratio or Rate?***
*While both Bit Error Rate and Bit Error Ratio are often used interchangeably, we will use "ratio." The bit error rate (BER) is the number of bit errors per unit time. The bit error ratio (also BER) is the number of bit errors divided by the total number of transferred bits during a studied time interval.*

You can measure the interface BER using a bit error ratio test (BERT), which transmits bit test patterns and counts the bit errors at the receiver over an extended period. BER is the ratio of the bit error count to the total transmitted bit count, and is very useful in measuring the transmission quality of an interface.

$$\textit{Bit Error Ratio} = \frac{\text{(bit errors)}}{\text{(bit total)}}$$

Once you have generated a report, the results can be used to manually calculate the bit error rate.

$$\textit{Bit Error Rate} = \frac{\text{(bit errors)}}{\text{(test time)}}$$

The DarkStar BERT feature uses patterns of logical ones and zeros generated by a pseudo-random binary sequence (PRBS) with a bit length of (2^31)-1. A PRBS sequence is used for both error forwarding signals (Idle-Tx) and `BERT transmit`.

#### 5.1.8.1 Running BERT

You can set up a BERT a couple of different ways:

- On a single DarkStar system, on one interface, by looping together the Rx and Tx sides.
- On paired DarkStar systems by transmitting on an interface on the first system, and receiving on an interface on the second system.
- On a DarkStar system by transmitting/receiving on an interface on the DarkStar system, and receiving/transmitting on an interface on an alien system using the same PRBS pattern.

The commands used to run BERT are fully detailed in the DarkStar DXMOS Command Reference, but the general procedure is as follows:

1. Select the desired interface(s) using the `module` command from configuration mode (`CONF#`).
2. Run `bert log` to configure error-checking frequency. Refer to Configure BERT Logging.
3. Issue a `bert transmit` on the transmitting interface to initiate PRBS generation.
4. Issue a `bert receive` to initiate checking of the PRBS stream, begin counting errors, and measure elapsed time.
5. Use `show bert` and `show bert log` to verify that a BERT is running, and to view BERT results.

After you initiate PRBS generation and reception on the selected interface(s), you need to allow the BERT to run at a time interval determined by a target confidence level. This interval can be determined using the formula provided in Determining BER Minimum Test Time.

#### 5.1.8.2 Viewing Test Results

There are three methods for obtaining BER test results.

- **While the BERT is running**: use `show module` on the *receiving interface* to obtain test results up to the time that the command was issued. (The information can be found in the BERT results category of the command's report.) This method may be useful to spot-check results during an ongoing BERT.
- **While the BERT is running:** use `show bert` to obtain current results for all active BER tests. This method may be useful to spot-check results during an ongoing BERT, as `show bert` displays all transport interfaces running BERT in the console output, unlike `show module`, which might require searching for interfaces running BERT.
- **To end the BERT and obtain final test results:** use the `no` parameter for each BERT command and issue them in reverse order: `no bert receive` on the receiving interface, followed by `no bert transmit` on the transmitting interface. Final test results are automatically generated when `no bert receive` is issued.

The BER test-results message contains the total number of bits received, total single-bit errors, and the total time elapsed in seconds. The maximum number of errors reported is 4.2 billion. Errors beyond the maximum limit result in overflow.

#### 5.1.8.3 Verify a BERT is Running

While a BERT is running, the `show bert` command can be used to obtain current results for all active BER tests. This method displays the BERT status for all interfaces running a BERT, and may be useful to spot check results during an ongoing BERT run.

#### 5.1.8.4 View a BER Test Results Log

After specifying the logging interval via the `bert log` command and the desired interface(s) on which to issue the `bert transmit` and `bert receive` commands, you are ready to issue `show bert log` or `do show bert log` (depending on the prompt mode) to view a report of BERT events listed as log entries.

BERT events include the following:

- When a `BERT receive` started or stopped
- When a `BERT transmit` started or stopped
- A status change on an interface (i.e., a client or wave) with an active BER test
- The current test results for an active BER test

An initial BERT report log-entry follows the start of `BERT receive` (within the logging interval specified by the `bert log` command). New BERT log-entries within the specified logging interval occur only if the BERT error count changes since the previous report.

**Example:** The BERT logging interval is set to 2 minutes, the BERT is launched on the Wave 0 interface using `bert transmit` and looped back onto itself using `bert receive`; then the five current log entries in the log file are viewed on the console:

```
localhost CONF# bert log 2
localhost CONF# module wave 0
localhost CONF-MOD-WAVE[0]# bert transmit

BERT transmission started on Wave 0.

localhost CONF-MOD-WAVE[0]# bert receive

BERT checking started on Wave 0.

localhost CONF-MOD-WAVE[0]# do show bert log recent

Wed Jan 1 2025 08:41:53: System rebooted
Wed Jan 1 2025 09:45:15: System rebooted
Wed Jan 1 2025 17:07:21: Start BERT transmit on Wave 0
Wed Jan 1 2025 18:08:28: Start BERT receive on Wave 0
Wed Jan 1 2025 18:09:22: BERT report on Wave 0: 0 errors in 54 seconds
```

### 5.1.8.5 Determining BER Minimum Test Time

Extending the BER test time increases the statistical level of confidence in the BER measurement. You can use the following formula to calculate the BER test time and associated confidence levels.

$n = \frac{\ln(1-C)}{PE}$ and BER test time $TRT = \frac{n}{b}$

$n$ = number of transmitted bits required
ln = natural logarithm
$PE$ = target bit error rate
$C$ = confidence level
$TRT$ = the BER test time in seconds
$b$ = the bit transmission rate in bps

So for a confidence level of 95%:

$$n = \frac{\ln(1-0.95)}{1\text{x}10^{-12}}$$

$$n = \frac{\ln(0.05)}{1\text{x}10^{-12}}$$

$n = 2.995\text{x}10^{12}$ bits

$\text{DataRate}_{(10GE)}$ $b = 10.312\text{x}10^{9}$

and $TRT = \frac{2.995\text{x}10^{12}}{10.312\text{x}10^{9}}$

so BER test time $TRT$ = 290.5 seconds

The table shows the BER minimum test time, in seconds, needed to verify a BER of $10^{-12}$, at 85%-99% levels of confidence, for a SONET and a 10GE link.

**TABLE 5.8. BER test times required for BER < $10^{-12}$**

| Bit Rate (Gbps) | C = 99% | C = 95% | C = 90% | C = 85% |
|---|---|---|---|---|
| 9.953 (SONET) | 463 | 301 | 232 | 193 |
| 10.312 (10GE) | 447 | 291 | 224 | 184 |

From the table, on a SONET link at 9.953Gbps, BER test time needs to be at least 301 seconds in order to be 95% confident that its BER is better than $10^{-12}$.

# 5.2 System Maintenance and Updates

Transceivers, fan modules, and power supplies can be hot-swapped without cycling power and without a cold boot of the system. Operating system updates can be applied remotely, and the operating system reloaded without losing transport data.

## 5.2.1 Hot Swap a Power Supply Module

Verify that it is possible to operate the system on one power supply, while replacing the other supply. Follow the steps in Figure 5-8. **Note:** Your power supply may differ from the one illustrated here.

**FIGURE 5-8. Hot Swap a Power Supply Module**

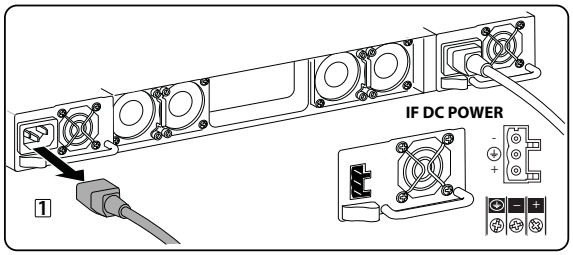


1 Unplug the power cord from the power supply module.

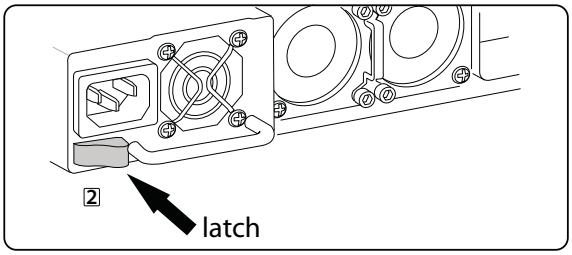


2 Disengage the latch that secures the module in the chassis.

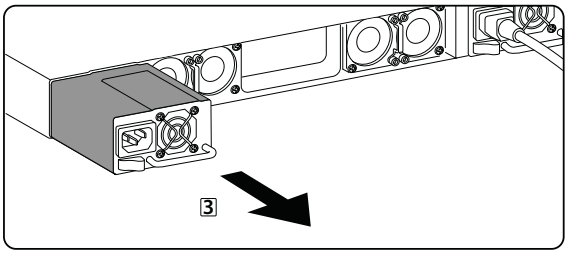


3 Pull the power supply module out of the chassis by its handle. Use care as the module is fairly heavy.

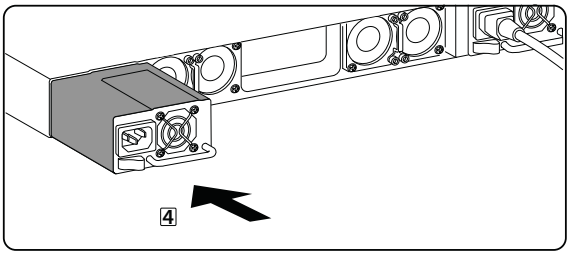


4 Wait about 10 seconds and then insert the new power supply module back into the chassis, positioned as shown above.

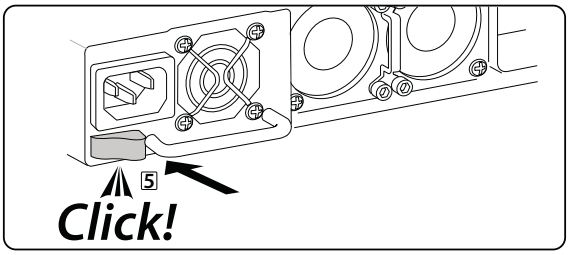


5 Snap the latch into place to secure the power supply module. You may need to lift up or push down slightly on the module to get it to snap into place.

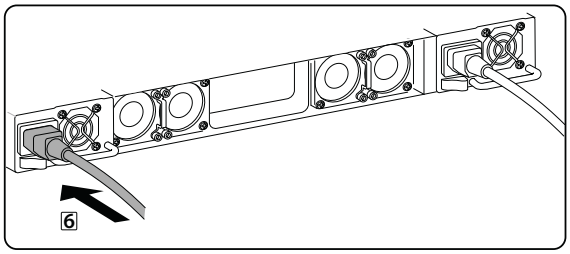


6 Reconnect the power cord to the power supply module.

## 5.2.2 Hot Swap a Fan Module

Figure 5-9 illustrates how to replace a fan module.

**FIGURE 5-9. Replacing Fan Modules**

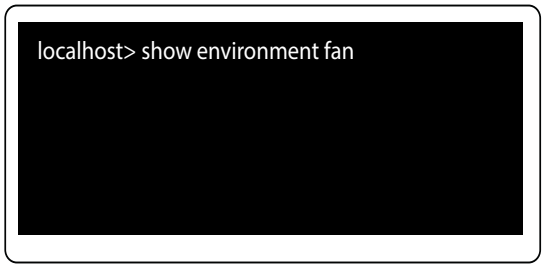


1 Locate the fan module in question. The "show environment fans" command describes the physical location of each fan module. When viewed from the back of the system, module 0 is on the left, module 1 is in the center, and module 2 is on the right.

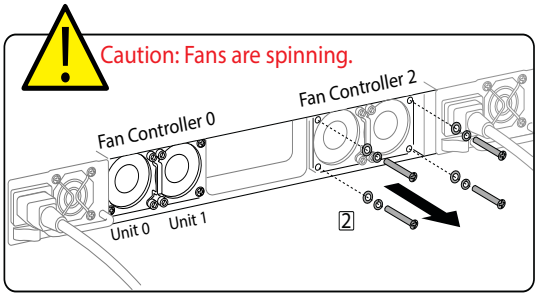


2 Using a Phillips-head screwdriver, remove the four (4) outer-most screws that hold the module in place.

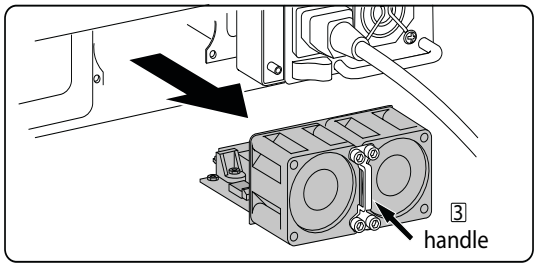


3 Grasp the module by its handle and pull it out of the chassis.

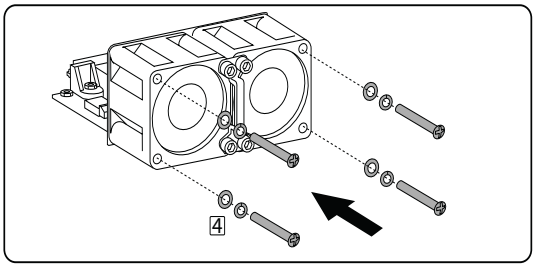


4 Reinsert the screws with washers and spacers into the replacement module.

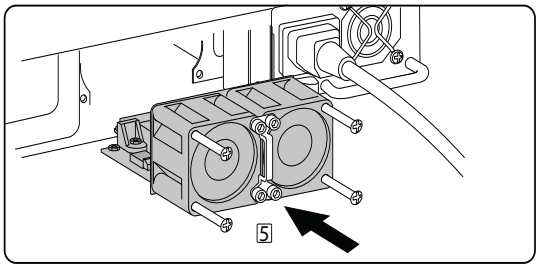


5 Insert the replacement module into the chassis, making sure it is fully in place and squarely aligned.

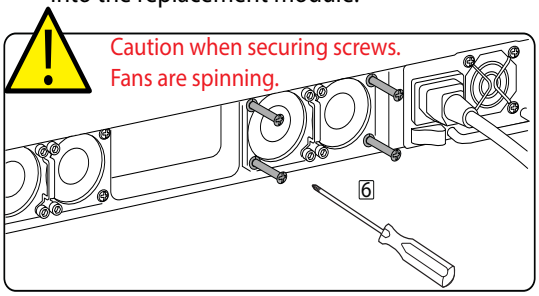


6 The module will be energized the moment it is seated if the system is powered. Fasten the (4) screws that hold the module in place.

## 5.2.3 Line Transceiver Replacement

Some DarkStar systems have line transceivers (sometimes called “wave laser modules”) that are hot-swappable and can be replaced while the system is running. Follow the steps in Figure 5-10 to replace the line transceivers (and, in certain DarkStar systems, OSC modules), which are located under the top access panel (on some models).

**Note:** To replace client transceivers, which are located on the front panel of the chassis, follow steps 4 through 9.

| | |
|---|---|
| ⚠ | **When replacing line transceivers, be certain that fiber and power cables have sufficient slack to prevent damage or disconnection.** |

**FIGURE 5-10. Replace Line Transceiver**

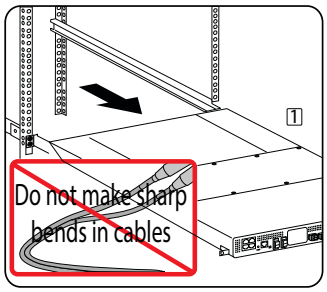


1 Slide the system forward on its rails far enough to access the panel. Do not strain the attached fiber connections when sliding the system forward. Fiber bends should not be smaller than 2.5” in. diameter.

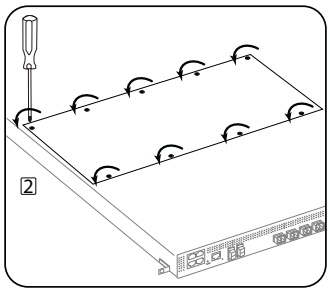


2 Using a Phillips-head screwdriver, unscrew the nine or five screws securing the panel. Each screw requires only a quarter turn to loosen each screw.

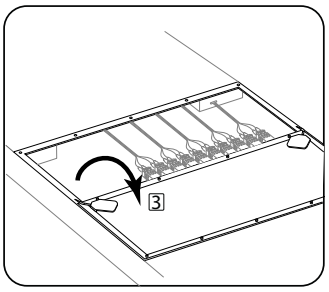


3 To open the panel, grip the rear side, then pull up and flip over towards the front of the chassis.

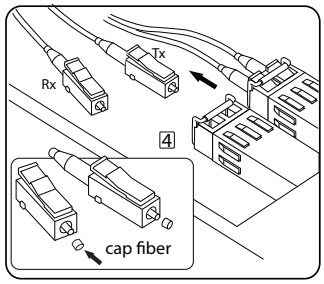


4 Remove the fiber pair from the line transceiver and cap each connector. Make note of connection placement to ensure Rx and Tx connections are properly reestablished at the end of this procedure.

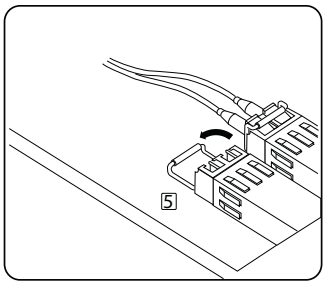


5 Push down on the latch mechanism to release the line transceiver from its cage. The latch snaps when it is open. Note that the latch mechanism may vary depending on the type of transceiver in the system.

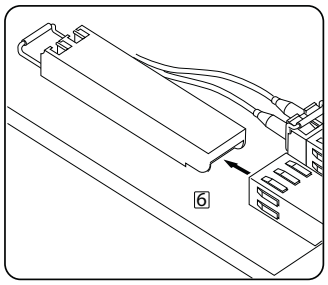


6 Slide the transceiver out of the cage.

**FIGURE 5-11. Replace Line Transceiver (cont.)**

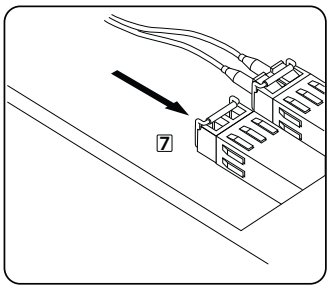


**7** Insert the replacement line transceiver into the cage. It will click when properly seated. It may be helpful to compare its alignment with adjacent transceivers to verify correct installation.

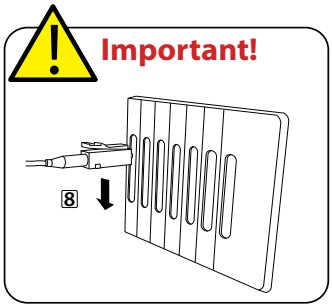


**8** Clean the fiber ends with an approved fiber cleaner (a fiber cleaner is included with the system). In a single step for each connector, clean the fiber and insert it into the transceiver. Do not clean or insert both fibers at the same time.

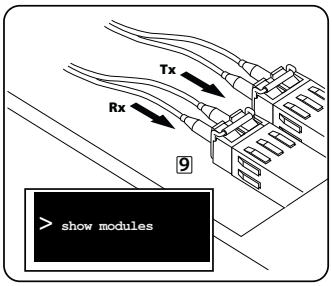


**9** Visually confirm that the Rx and Tx fibers are properly inserted. Run the `show modules` command to verify that the transceiver is properly seated. The reported Rx power level should be similar to the other line transceivers.

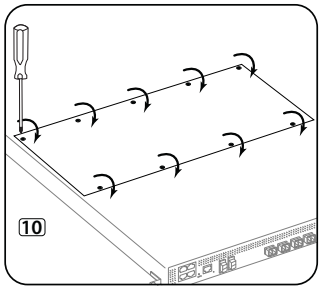


**10** Close the hatch by sliding the access panel back to its original position. Secure it by tightening the screws with a Phillips-head screwdriver. ***Only a quarter turn*** is required to fasten each screw.

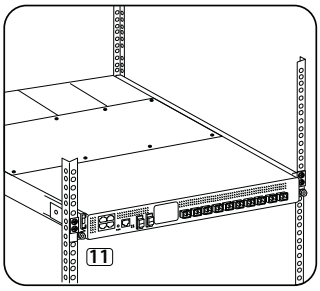


**11** Slide the system into the rack and secure thumbscrews.

## 5.2.4 Hitless Software Update and Reboot

In the event of a software update, DarkStar systems can be updated with no loss of transport data. You may demonstrate this yourself by first provisioning the system with connections and live traffic, or using the BERT feature, and then applying the `reboot` command shown below. You will observe no loss of data while the system reboots and restarts the operating system.

### 5.2.4.1 Verify that Warm Reboot Does Not Affect Traffic

If you have not yet saved your configurations, be sure to issue the `write memory` command to save them now before issuing the `reboot` command.

For system reboot:

```
localhost# reboot running
Are you sure? [yes/NO] yes

Initiating reboot of running source...




*** NOTICE ****
DXMOS has been shut down

Unmounting "/dump" [Done]
Unmounting "/gateware" [Done]
Unmounting "/" [Done]
All filesystems unmounted
Rebooting ...
```

At this point, the system reboots. Customer data will not be affected by rebooting the system.

# 6

# Connecting a DarkStar System

## 6.1 Overview

This chapter describes how to connect your DarkStar systems, while also serving as the subsequent test plan for ensuring that the optical network is functioning properly.

The following areas are covered:

- Muxponders
- Transponders
- Mux/Demux with Amplifier System (DMD-A)
- Inline Amplifiers
- Utility Amplifiers
- SpectraPath
- Managing Amplifiers
- Redundancy (APP)
- Setting Up Line Protection (When protection feature is present)

Before connecting your system, see Available Protocols for supported DarkStar system protocols, data rates and corresponding encapsulations.

It is also good practice to verify the quality of the dark fiber. The DarkStar systems ship with all transceivers in place, with factory settings preset to the operating values as defined in System Factory Settings.

Please follow the XKL recommended operating conditions for transceiver receive power levels in Recommended Transceiver Sensitivity Levels. This will ensure the proper operation of the system. Use optical attenuators, or pads, as needed, so that the line transceivers (i.e., DWDM) and client transceivers have a receive power as specified.

**Important:** It is not possible to control the transmit power levels of any optical transceivers. If optical receive power levels are higher than the XKL recommendations, install attenuators.

**Notes:**

- Some sections in this chapter may not be applicable for your particular system setup or testing requirements.
- This chapter generally uses the host name that combines the product name with `Location1`, or `Location2` in the CLI examples (for instance, `DQM10_Location1`). To change a host name from the system default `localhost`, see Specify a Host Name.
- To move between command mode prompts, such as from enable mode (`#`) to configure mode (`CONF#`), familiarize yourself with DXMOS Modes. You can find them in the Command Reference located on the website.

**Connecting a system properly...**

- In the following examples, we connect the muxponders to each other using simplex fiber. For our transponders, we connect the DMD-As to each other using duplex fiber, and the DMD-As to their transponder counterparts using MPO cable. When using simplex fiber, the best practice for eye safety is to first connect cable ends to "In" rather than to "Out." If connecting to "Out" first, you will have light streaming from the open fiber until it is connected to "In."
- The line port of each DarkStar system needs to be connected with single-mode (SM) fiber. **Note:** DarkStar systems use SM fiber, SMF-28. Only short-reach client transceivers used in muxponder or transponder systems (those with less than 500m reach and operating at 850nm wavelength) use multi-mode (MM) fiber.
- Before connecting any fibers, you must first clean them, as indicated below. In a single step for each connection, clean the fiber end and then insert it into the appropriate connector (i.e., system line port or client interfaces).

***Always*** clean the fiber cable before inserting it...

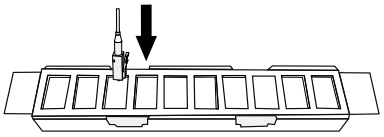

# 6.2 Muxponders

Addressed are the following system connections:

- DQM10
- DQM100
- DSM10-10
- DQM400-4
- DFM400-12

## 6.2.1 DQM10

This section uses the DarkStar DQM10 12-channel muxponder as an example. Although the processes described here are applicable to any DarkStar muxponder model, there may be some minor command line or descriptive differences. Figure 6-1 illustrates the connection of two DQM10 12-channel muxponders.

**FIGURE 6-1. Connecting Two DQM10 Muxponders**

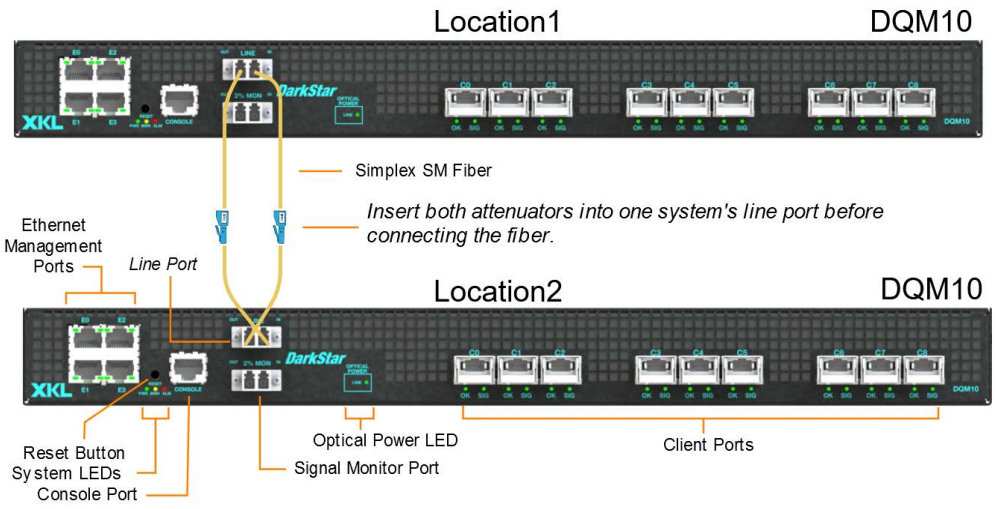


Insert external attenuators into one system's line port before connecting the fiber. In this example, we use an attenuator value of 15dB. This is to ensure that the line transceivers (i.e., DWDM) do not exceed the maximum receive power (RxPow). Confirm this by referring to Recommended Transceiver Sensitivity Levels. You can connect and configure client connections as soon as you have verified the line port link.

**Notes:**

- The attenuator value of 10-15dB is an acceptable range for a system with EDFA, such as in our working example.
- Depending on the customer equipment being attached, client transceivers may also require attenuators. Refer to Recommended Transceiver Sensitivity Levels for DarkStar equipment, and pertinent equipment documentation for the customer equipment.
- The rest of the section assumes that the equipment has been deployed in the field. However, if you are setting up the systems in a lab prior to deployment, the following process is the same.

#### 6.2.1.1 Verify the Line Port Link

To verify the line port link, issue the `show modules summary` command and confirm that the receive power (RxPow) for all line (wave) and OSC transceivers falls within an acceptable range. Alternatively, issue the command `show modules wave 0 verbose` and note the manufacturer's min/max Rx Laser Input Power values.

If the DQM10 was configured with an optional EDFA, pay special attention to the OSC RxPow value, as shown in the output below. Note that the RxPow for all of the waves is set by the EDFA, and not the attenuator shown in Figure 6-1. Only the OSC RxPow is determined by the attenuator value. Our example has an input EDFA installed in each DQM10 system. The value for the OSC RxPow should be very similar to the sample output below if the total line attenuation value is 15dB. If not, the fiber cable that you installed when you connected the line-side ports was not seated correctly or is not an SM fiber.

**Note:** Recommended RxPow power levels depend on the line transceiver (i.e., DWDM) type. For specifics, refer to Recommended Transceiver Sensitivity Levels or issue the command `show modules wave 0 verbose`. If your DarkStar muxponder has been configured with one or more EDFAs, see the section Optional EDFA.

> **Caution:** Excessive input power can cause link performance degradation or component damage.

The following output is from a DQM10 12-channel system.

```
DQM10_Location1# show modules summary
 Interface   Admin  Line    Rate       RxPow     Ch  Transceiver  Last Line Chg
------------ ----- ------- -------- ----------- ---- -----------  -------------
Client 0
 Lane 0      Up    Up      10Gb/s      -5.7 dBm N/A  OK           00d 19:57:54
 Lane 1      Up    Up      10Gb/s      -5.3 dBm N/A  OK           00d 19:57:55
 Lane 2      Up    Up      10Gb/s      -5.9 dBm N/A  OK           00d 19:57:55
 Lane 3      Up    Up      10Gb/s      -5.0 dBm N/A  OK           00d 19:57:55
Client 1
 Lane 0      Up    Up      10Gb/s      -6.1 dBm N/A  OK           00d 19:57:55
 Lane 1      Up    Up      10Gb/s      -5.8 dBm N/A  OK           00d 19:57:55
 Lane 2      Up    Up      10Gb/s      -5.6 dBm N/A  OK           00d 19:57:55
 Lane 3      Up    Up      10Gb/s      -6.0 dBm N/A  OK           00d 19:57:55
Client 2
 Lane 0      Up    Up      10Gb/s      -5.2 dBm N/A  OK           00d 19:57:55
 Lane 1      Up    Up      10Gb/s      -5.1 dBm N/A  OK           00d 19:57:55
 Lane 2      Up    Up      10Gb/s      -5.5 dBm N/A  OK           00d 19:57:55
 Lane 3      Up    Up      10Gb/s      -5.8 dBm N/A  OK           00d 19:57:55
Wave 0       Up    Up      10Gb/s      -9.4 dBm 20.0 OK           00d 19:57:55
Wave 1       Up    Up      10Gb/s      -9.7 dBm 21.0 OK           00d 19:57:55
Wave 2       Up    Up      10Gb/s      -9.2 dBm 22.0 OK           00d 19:57:55
Wave 3       Up    Up      10Gb/s      -8.7 dBm 23.0 OK           00d 19:57:55
Wave 4       Up    Up      10Gb/s      -8.9 dBm 24.0 OK           00d 19:57:55
Wave 5       Up    Up      10Gb/s      -8.6 dBm 25.0 OK           00d 19:57:55
Wave 6       Up    Up      10Gb/s      -8.8 dBm 26.0 OK           00d 19:51:19
Wave 7       Up    Up      10Gb/s      -9.0 dBm 27.0 OK           00d 19:51:19
Wave 8       Up    Up      10Gb/s      -8.7 dBm 28.0 OK           00d 19:45:11
Wave 9       Up    Up      10Gb/s      -9.1 dBm 29.0 OK           00d 19:57:55
Wave 10      Up    Up      10Gb/s      -8.5 dBm 30.0 OK           00d 19:46:56
Wave 11      Up    Up      10Gb/s      -9.3 dBm 31.0 OK           00d 19:51:20
OSC 0        Up    Up      100Mb/s    -25.6 dBm N/A  N/A         00d 19:57:56

> means the line state has not changed since DXMOS was restarted.
```

#### 6.2.1.2 Optional EDFA

Your DarkStar muxponder may have been configured with one or more EDFAs. Although EDFAs in a muxponder system have their output power optimally set by XKL, make sure that there is sufficient input power to the EDFA. To do this, determine the receive power (RxPow) level of the EDFA by issuing a `show amplifier` command. Then refer to the EDFA minimum (Min) and maximum (Max) values for total operating input power (dBm) in Table B-6, EDFA Optical Specifications.

**Note:** Default amplifier settings will be set according to the number of waves the system is configured for, 12, 24, or 36. Depending on the number of additional DWDM channels connected to the expansion ports, the amplifier settings may need to be manually adjusted: a DQM10 with expansion can support up to 48 100GHz-spaced DWDM channels max.

#### 6.2.1.3 Confirm Client Transceivers

Some DarkStar models do not ship with the client transceivers installed in the system. Install the transceivers if necessary.



**When connecting a fiber cable, DO NOT clean both ends of the fiber cable at the same time. Rather, clean and insert one end of the fiber cable into the transceiver or adapter, then clean and insert the other end.**

#### 6.2.1.4 Determine Transceiver Type

To determine the line transceiver (i.e., DWDM) type in the system, use the `show modules` command. Wave 0 is shown in this example.

```
DQM10_Location1# show modules wave 0

Wave 0    Down
  Description: .... Seattle_to_Redmond
  Tx: ............. OK                        Rx: .......... LOS
  State Changed: .. 00d 20:00:30             Channel: ..... 14.0
  Tx Laser: ....... Enabled                   Frequency: ... 191400 GHz
  Tx Power: ....... -0.2 dBm                  Wavelength: .. 1566.31 nm
  Rx Power: ....... -9.4 dBm                  Module Type: . Tunable SFP+
  Loopback: ....... Not Supported             Temperature: . 37 C
  Encapsulation: .. 10G Ethernet              Vendor: ...... JDSU
  Last Cleared: ... 00d 19:54:35              Part No.: .... JST01TMAC1CY5GEN
  Link Downtime: .. 00d 20:00:30              Serial No.: .. FE265518003D
  Maximum Reach: .. 80 km on SM               MFG Date: .... 140624
  Idle Tx/Mute: ... Idle Tx
```

### 6.2.1.5 Configuring Optical Transport Service for DQM10

DQM10 models are delivered equipped with QSFP+ client modules. Each client module provides four client lanes. Each client lane can be configured to a variety of data rates and encapsulation types. The default DarkStar configuration does not include connections between client lanes and wave interfaces.

DXMOS running on DQM10 models provides client-to-wave connections as individually-configured client/lane connections to single wave interfaces. A 40Gb Ethernet connection across the transport switch is possible as a collection of four client/lane connections to four wave interfaces. Each connection must be configured with its own `connect` command.

Lane notation is `int/lane`, (e.g., `client 1/3`, meaning `lane` *3* of interface `client` *1*). QSFP+ lanes are numbered 0 through 3.

Once your equipment has been connected to client/lane ports using jumper fibers, the DarkStar system must be provisioned for transport service using the following procedure:

1. Enter enable mode and type `show connections` to display existing connections.
2. Choose a client/lane and wave interface, for example, `client 1/3` and `wave 5`.
3. Type `configure` to enter configuration mode.
4. Type `connect client 1/3 wave 5 encapsulation z` (`1` is the client interface to be connected; `3` is the client lane selected; `5` is the wave channel to be connected; `z` is the encapsulation type).
5. Connect to the remote DarkStar network on the other end of the fiber line and, using the same process, connect the same previously specified wave and client interfaces that terminate the remote network service.
6. Save the updated configuration with a `write memory` for each system.

**Note:** All QSFP+ configuration commands are available at the lane level. All but `label description` are available at the module level, and they are shorthand to apply the setting to all lanes in the module. Similarly, the `show` command can be executed against an interface or a lane of an interface.

The following example shows some client/lane and wave connections.

```
localhost# show connections

10G Switch Complex connections:
Idx   If1           If2            Channel   If1 Line / Rate     If2 Line / Rate
---   ------------- -------------  -------   -----------------   -----------------
0     Client 0/0    Wave 0           20.0      Alarm   /10GE       Up      /10GE
1     Client 0/1    Wave 1           21.0      Alarm   /10GE       Up      /10GE
2     Client 0/2    Wave 2           22.0      Alarm   /10GE       Up      /10GE
3     Client 0/3    Wave 3           23.0      Alarm   /10GE       Up      /10GE
4     Client 1/1    Wave 4           24.0      Alarm   /10GE       Up      /10GE
5     Client 2/0    Wave 8           28.0      Alarm   /10GE       Up      /10GE
6     Client 2/1    Wave 9           29.0      Alarm   /10GE       Up      /10GE

localhost CONF# connect client 1/0 wave 5 encapsulation 10gigabitethernet
Switch Connect: Connection successful (Client 1/0, Wave 5)
localhost CONF#
```

## 6.2.2 DQM100

This section uses the DarkStar DQM100 2-channel muxponder as an example. Although the processes being described here are applicable to any DarkStar muxponder model, there may be some minor command line or descriptive differences. Figure 6-2 illustrates the connection of two DQM100 2-channel muxponders.

**FIGURE 6-2. Connecting Two DQM100 Muxponders**

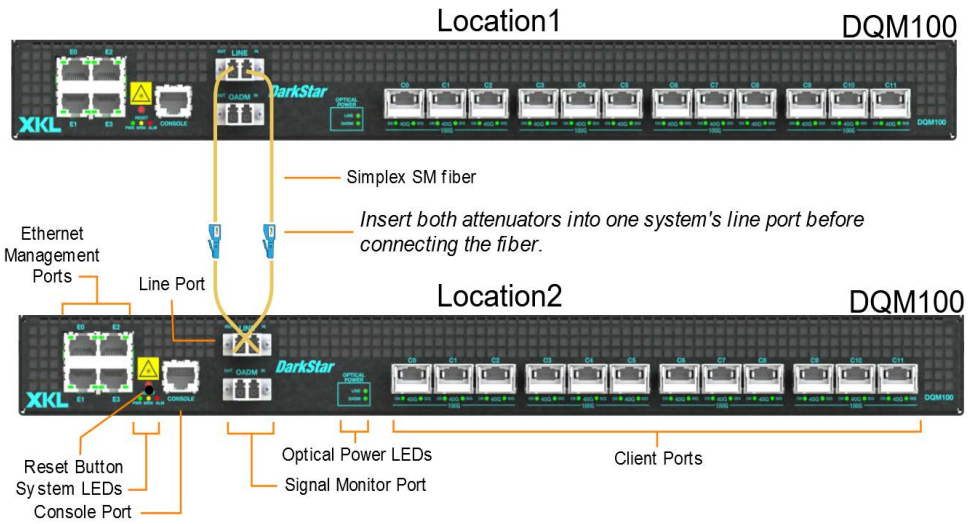


Insert external attenuators into one system's line port (as shown above) before connecting the fiber. In this example, we use an attenuator value of 15dB. This is to ensure that the line transceivers (i.e., DWDM) do not exceed the maximum receive power (RxPow). Confirm this by referring to Recommended Transceiver Sensitivity Levels. You can connect and configure client connections as soon as you have verified the line port link.

**Notes:**

- The attenuator value of 10-15dB is an acceptable range for a system with an EDFA.
- Depending on the customer equipment being attached, client transceivers may also require attenuators. Refer to Recommended Transceiver Sensitivity Levels for DarkStar equipment, and pertinent equipment documentation for the customer equipment.
- The rest of the section assumes that the equipment has been deployed in the field. However, if you are setting up the systems in a lab prior to deployment, the following process is the same.

#### 6.2.2.1 Verify the Line Port Link

To verify the line port link, issue the `show modules summary` command and confirm that the receive power (RxPow) for the trunk (wave) and OSC transceivers falls within an acceptable range. Alternatively, issue the command `show modules wave 0 verbose` and note the manufacturer's min/max Rx Power values. If the DQM100 was configured with an optional EDFA, pay special attention to the OSC RxPow value, as shown in the output below. Note that the RxPow for the trunks (waves) is set by the EDFA, and not the attenuator shown in Figure 6-2. Only the OSC RxPow is determined by the attenuator value. Our example has an input EDFA installed in each DQM100 system. The value for the OSC RxPow should be very similar to the sample output below if the attenuator value is 15dB. If not, the fiber cable that you installed when you connected the line-side ports was not seated correctly or is not an SM fiber.

**Note:** Recommended RxPow power levels depend on the trunk (wave) transceiver (i.e., DWDM) type. For specifics, refer to Recommended Transceiver Sensitivity Levels or issue the command `show modules wave 0 verbose`. If your DarkStar muxponder has been configured with one or more EDFAs, see the section Optional EDFA.

**Caution:** Excessive input power can cause link performance degradation or component damage.

The following output is from a DQM100 2-channel system.

`DQM100_Location1#` **`show modules`** `summary`

```
 Interface   Admin  Line    Rate       RxPow     Ch  Transceiver  Last Line Chg
------------ ----- ------- -------- ----------- ---- -----------  -------------
Client 0
 Lane 0      Up    Up      10Gb/s      -5.1 dBm N/A  OK           00d 03:51:05
 Lane 1      Up    Up      10Gb/s      -5.4 dBm N/A  OK           00d 03:51:05
 Lane 2      Up    Up      10Gb/s      -5.8 dBm N/A  OK           00d 03:51:05
 Lane 3      Up    Up      10Gb/s      -6.1 dBm N/A  OK           00d 03:51:05
Client 1
 Lane 0      Up    Up      10Gb/s      -5.5 dBm N/A  OK           00d 03:51:05
 Lane 1      Up    Up      10Gb/s      -5.3 dBm N/A  OK           00d 03:51:05
 Lane 2      Up    Up      10Gb/s      -5.9 dBm N/A  OK           00d 03:51:05
 Lane 3      Up    Up      10Gb/s      -5.4 dBm N/A  OK           00d 03:51:05
Client 2
 Lane 0      Up    Up      10Gb/s      -5.7 dBm N/A  OK           00d 03:51:05
 Lane 1      Up    Up      10Gb/s      -5.2 dBm N/A  OK           00d 03:51:05
 Lane 2      Up    Up      10Gb/s      -5.6 dBm N/A  OK           00d 03:51:05
 Lane 3      Up    Up      10Gb/s      -5.3 dBm N/A  OK           00d 03:51:05
Client 3
 Lane 0      Up    Up      10Gb/s      -6.1 dBm N/A  OK           00d 03:51:05
 Lane 1      Up    Up      10Gb/s      -6.3 dBm N/A  OK           00d 03:51:05
 Lane 2      Up    Up      10Gb/s      -5.7 dBm N/A  OK           00d 03:51:05
 Lane 3      Up    Up      10Gb/s      -6.0 dBm N/A  OK           00d 03:51:05
Client 4
 Lane 0      Up    Up      10Gb/s      -5.0 dBm N/A  OK           00d 03:51:05
 Lane 1      Up    Up      10Gb/s      -5.6 dBm N/A  OK           00d 03:51:05
 Lane 2      Up    Up      10Gb/s      -5.9 dBm N/A  OK           00d 03:51:05
 Lane 3      Up    Up      10Gb/s      -6.2 dBm N/A  OK           00d 03:51:05
Client 5     Up    Up      10Gb/s      -5.5 dBm N/A  OK           00d 03:51:05
Trunk 0
 Lane 0      Up    Up      N/A        -12.9 dBm 20.0 OK           00d 00:00:01
Trunk 1
 Lane 0      Up    Up      N/A        -13.2 dBm 21.0 OK           00d 03:51:05
OSC 0        Up    Up      100Mb/s     -8.5 dBm N/A  N/A          00d 03:51:05
OSC 1        Up    Up      100Mb/s     -8.3 dBm N/A  N/A          00d 03:51:05

> means the line state has not changed since DXMOS was restarted.
```

#### 6.2.2.2 Optional EDFA

Your DarkStar muxponder may have been configured with one or more EDFAs. Although EDFAs have their output power optimally set by XKL, make sure that there is sufficient input power to the EDFA. To do this, determine the receive power (RxPow) level of the EDFA by issuing a `show amplifier` command. Then refer to the EDFA minimum (Min) and maximum (Max) values for total operating input power (dBm) in Table B-6, EDFA Optical Specifications.

#### 6.2.2.3 Confirm Client Transceivers

Some DarkStar models do not ship with the client transceivers installed in the system. Install the transceivers if necessary.



**When connecting a fiber cable, DO NOT clean both ends of the fiber cable at the same time. Rather, clean and insert one end of the fiber cable into the transceiver or adapter, then clean and insert the other end.**

#### 6.2.2.4 Determine Transceiver Type

To determine the line transceiver (i.e., DWDM) type on the system, use the `show modules` command. The module type `trunk` and the interface `0` is shown in this example.

```
DQM100_Location1# show modules trunk 0

Trunk 0    Up
  Description: .... Seattle_to_Redmond
  Tx: ............. OK                          Rx: .......... LOL
  State Changed: .. 00d 00:00:01                Channel: ..... 13.5
  Tx Laser: ....... Enabled                     Frequency: ... 191350 GHz
  Tx Power: ....... 2.6 dBm                     Wavelength: .. 1566.72 nm
  Rx Power: ....... -12.9 dBm                   Module Type: . Tunable CFP
  Loopback: ....... N/A                         Temperature: . 59 C
  Encapsulation: .. Undefined                   Vendor: ...... FUJITSU
  Last Cleared: ... 00d 04:26:19                Part No.: .... FIM38100/100
  Link Downtime: .. 00d 02:03:51                Serial No.: .. 38100100C4000Z
  Maximum Reach: .. Unknown                     MFG Date: .... 20170213
```

### 6.2.2.5 Configuring Optical Transport Service for DQM100

The DQM100 does not include any default connections from any client ports. All DQM100 systems must be configured to enable connections between systems. **Note:** All names specified are for example purposes only. See SpectraPath Provisioner Pair Configuration Example.

The following steps describe the connection of a pair of DQM100 systems.

1. Enter enable mode.
2. Type `configure` to enter configuration mode.
3. Configure the network topology by first entering the "switch" section of the configuration mode.

   `CONF#` **switch**

   `CONF-SWITCH#`

4. Define an ID, and optionally, an alias for each DQM100 system in the network. This is accomplished using the "local-system" command on each system (via console or VTY).
   - Define an ID for the local system.

     The ID must be an integer value in the range 1 to 63. Each system involved in the network must have a unique ID (normally 1,2,3,4,5, and so on). It is the ID that gets passed between systems for routing packets.

     `CONF-SWITCH#` **local-system id** {*id*}

     For example: **local-system id** *1*

   - **[OPTIONAL] Defining an "alias system" list**

     For each system in the list, you can create alias names for the IDs that you previously defined above (i.e., `id` *1*, `id` *2*, `id` *3*, etc.).

     `CONF-SWITCH#` **alias system id** {*id*} **name** {*SystemName*}

     For example:

     **alias system id** *1* **name** *System1*
     ... results in the local-system named *System1.*

     **Note:** For the rest of this section, we use a generic local alias, *System1*. Usually, however, more specific names are appropriate when creating local system aliases (e.g., **alias system id** *1* **name** *Seattle*).

   Repeat this step for each DQM100 system in the network before moving on to define the remote systems.

5. Define the remote systems for each DQM100 system in the network, as required.

   For example:

   **alias system id** *2* **name** *System2*
   ...results in the remote system named *System2.*

   **Note:** For the rest of this section, we use generic remote aliases (e.g., *System2). However*, more specific names are appropriate when creating remote aliases (e.g., **alias system id** *2* **name** *Spokane*).

6. Set up the network topology for each DQM100 system by using the `next-hop` command. This command defines the links between each trunk port of the current system and the adjacent systems.

   `CONF-SWITCH#` **next-hop system** {*name*} **via trunk** {*0,1*}

   **Note:** The next hop for all systems must be defined with the `next-hop system` command, which lays out the system-to-system routes. For instance, a pair of DQM100 systems would have trunk 0 of *System1* connected to trunk 0 of *System2*, and trunk 1 of *System1* connected to trunk 1 of *System2.*

   **Example:**
   Consider a point-to-point topology where we send traffic from the local-system, *System1*, to the remote system named *System2*, out of trunk 0:

   `CONF-SWITCH#` **local-system** *System1*

CONF-SWITCH# **next-hop system** *System2* **via trunk** *0*

We also want to send traffic from the local-system, *System1*, to the remote *System2* out of trunk *1*.

CONF-SWITCH# **next-hop system** *System2* **via trunk** *1*

Repeat Steps 5 and 6 for each DQM100 system in the network, as required.

**7.** Configure the virtual interfaces (VIFs).

Services are configured on the DQM100 using virtual interfaces (VIFs). Each client is assigned a local virtual interface name, and the system and client port of the remote end is assigned a remote virtual interface name.

There are up to six client transceivers (ports 0-5) in a DQM100. Each client transceiver is a QSFP+, which has 4 lanes (0-3). VIFs are numbers from 0 to 23 and are used in a DQM100 system to specify a unique client/lane.

Table 6-1 shows the Client VIFs (0-23) used to specify a unique client/lane. In other words, each VIF in the table represents the intersection of a particular client column with a particular lane row. For example, the VIF number "5" in "Client 5" corresponds to Client Transceiver 1, Lane 1.

**TABLE 6-1. Client VIF Number Table**

| | | Client Transceiver | | | | | |
|---|---|---|---|---|---|---|---|
| | | **0** | **1** | **2** | **3** | **4** | **5** |
| **Lane** | **0** | 0 | 4 | 8 | 12 | 16 | 20 |
| | **1** | 1 | 5 | 9 | 13 | 17 | 21 |
| | **2** | 2 | 6 | 10 | 14 | 18 | 22 |
| | **3** | 3 | 7 | 11 | 15 | 19 | 23 |

The following command connects the local virtual interface to the remote virtual interface. In this command, we assign the client VIF numbers (0-23), a remote destination ("dest") ID or optional remote-system name and, if desired, an optional description ("desc"). For the remote destination (i.e., "dest"), the remote-system ID (e.g., `id` *2*, `id` *3*, etc.) is required if the optional remote system name (e.g., *System2*) is not used.

CONF-SWITCH# **destination local-vif client** {*VIFnumber*} **remote-system** {*dest*} **remote-vif client** {*VIFnumber*} [*description* {*desc*}]

**[OPTIONAL] Using VIF "alias" commands**

As an alternative to the command above, use the following steps to create an alias for the local and remote VIF clients:

**a.** Create a local virtual interface alias specifying the client VIF number, assigning a unique VIF name and, if desired, adding a description.

CONF-SWITCH# **alias local-vif client** {*VIFnumber*} **name** {*localVIFname*} [*description* {*desc*}]

**b.** Create a remote virtual interface alias specifying the remote destination ("dest") ID or optional remote-system name, specifying a client VIF number, and assigning a unique VIF name.

CONF-SWITCH# **alias remote-vif** {*dest*} **client** {*VIFnumber*} **name** {*remoteVIFname*}

**c.** Connect the local virtual interface to the remote virtual interface and assign a unique optical-transport service name for the description.

CONF-SWITCH# **destination local-vif** {*localVIFname*} **remote-vif** {*remoteVIFname*} [*description* {*desc*}]

**Example:** Consider the following scenario where two optical transport services are being configured. Call the first service ***Sys1-client 0 to Sys2- client 0***, the second service ***Sys1-client 1 to Sys2-client 4***. In a "real-world" scenario, the descriptions would be more specific, such as describing the client traffic hooked up to the client port.

Steps:

- Create the local virtual interface (Step 7a).

  First service:
  CONF-SWITCH# **alias local-vif client** *0* **name** *Sys1-client0* **description** *"Sys1-client0 to Sys2-client0"*

Second service:
`CONF-SWITCH#` **alias local-vif client** *1* **name** *Sys1-client1* **description** *"Sys1-client1 to Sys2-client4"*

- Create the remote virtual interface (Step 7b).

  First service:
  `CONF-SWITCH#` **alias remote-vif** *System2* **client** *0* **name** *Sys2-client0*

  Second service:
  `CONF-SWITCH#` **alias remote-vif** *System2* **client** *4* **name** *Sys2-client4*

- Connect the local virtual interface to the remote virtual interface and assign a unique service name (Step 7c).

  First service:
  `CONF-SWITCH#` **destination local-vif** *Sys1-client0* **remote-vif** *Sys2-client0* **description** *"Sys1-client0 to Sys2-client0"*

  *Second service:*
  *`CONF-SWITCH#`* **destination local-vif** *Sys1-client1* **remote-vif** *Sys2-client4* **description** *"Sys1-client1 to Sys2-client4"*

**8.** Exit the switch configuration.

```
CONF-SWITCH# exit
CONF#
```

**9.** Login to the remote DarkStar system and configure that system as well.

**10.** Save the updated configuration with a `write memory` for each system.

### 6.2.3 DSM10-10

This section uses the DarkStar DSM10-10 muxponder as an example. Although the processes being described here are applicable to any DarkStar muxponder model, there may be some minor command line or descriptive differences. Figure 6-3 illustrates the connection of two DSM10-10 muxponders.

**Note:** DSM10-10 models use the port count as part of their model name, so DSM10-10 means a DSM10 10-port system.

**FIGURE 6-3. Connecting Two DSM10-10 Muxponders**

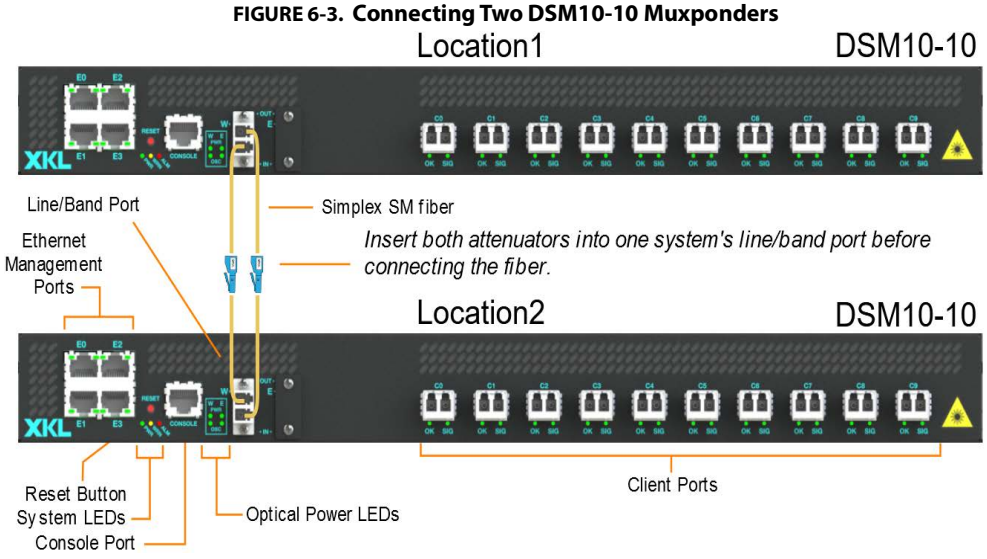


Insert external attenuators into one system's line/band port before connecting the fiber. In this example, we use an attenuator value of 15dB. This is to ensure that the line transceivers (i.e., DWDM) do not exceed the maximum receive power (RxPow). Confirm this by referring to Recommended Transceiver Sensitivity Levels. You can connect and configure client connections as soon as you have verified the line port link.

**Notes:**

- The attenuator value of 10-15dB is an acceptable range for a system with an EDFA.
- Depending on the customer equipment being attached, client transceivers may also require attenuators. Refer to Recommended Transceiver Sensitivity Levels for DarkStar equipment, and pertinent equipment documentation for the customer equipment.
- The rest of the section assumes that the equipment has been deployed in the field. However, if you are setting up the systems in a lab prior to deployment, the following process is the same.

#### 6.2.3.1 Verify the Line Port Link

To verify the line port link, issue the `show modules summary` command and confirm that the receive power (RxPow) for all line (wave) and OSC transceivers falls within an acceptable range. Alternatively, issue the command `show modules wave 0 verbose` and note the manufacturer's min/max Rx Power values. If the DSM10-10 was configured with an optional EDFA, pay special attention to the OSC RxPow value, as shown in the output below. Note that the RxPow for all of the waves is set by the EDFA, and not the attenuator shown in Figure 6-3. Only the OSC RxPow is determined by the attenuator value. Our example has an input EDFA installed in each DSM10-10 system. The value for the OSC RxPow should be very similar to the sample output below if the attenuator value is 15dB. If not, the fiber cable that you installed when you connected the line-side ports was not seated correctly or is not an SM fiber.

**Note:** Recommended RxPow power levels depend on the line transceiver (i.e., DWDM) type. For specifics, refer to Recommended Transceiver Sensitivity Levels or issue the command `show modules wave 0 verbose`. If your DarkStar muxponder has been configured with one or more EDFAs, see the section Optional EDFA.

> **Caution:** Excessive input power can cause link performance degradation or component damage.

The following output is from a DSM10-10 system.

```
DSM10-10_Location1# show modules summary
 Interface   Admin  Line    Rate       RxPow     Ch  Transceiver  Last Line Chg
------------ ----- ------- -------- ----------- ---- -----------  -------------
Client 0     Up    Up      10Gb/s      -9.8 dBm N/A  OK           00d 22:33:08
Client 1     Up    Up      10Gb/s      -9.7 dBm N/A  OK           00d 22:33:08
Client 2     Up    Up      10Gb/s     -10.6 dBm N/A  OK           00d 22:33:08
Client 3     Up    Up      10Gb/s     -10.1 dBm N/A  OK           00d 22:33:08
Client 4     Up    Up      10Gb/s     -11.1 dBm N/A  OK           00d 22:33:08
Client 5     Up    Up      10Gb/s     -10.9 dBm N/A  OK           00d 22:33:08
Client 6     Up    Up      10Gb/s      -9.9 dBm N/A  OK           00d 22:33:08
Client 7     Up    Up      10Gb/s      -9.6 dBm N/A  OK           00d 22:33:08
Client 8     Up    Up      10Gb/s     -11.3 dBm N/A  OK           00d 22:33:08
Client 9     Up    Up      10Gb/s     -10.2 dBm N/A  OK           00d 22:33:08
Wave 0       Up    Up      10Gb/s     -11.2 dBm 30.0 OK           00d 22:33:08
Wave 1       Up    Up      10Gb/s     -10.9 dBm 31.0 OK           00d 22:33:08
Wave 2       Up    Up      10Gb/s     -10.8 dBm 32.0 OK           00d 22:33:08
Wave 3       Up    Up      10Gb/s     -11.4 dBm 33.0 OK           00d 22:33:08
Wave 4       Up    Up      10Gb/s     -11.3 dBm 34.0 OK           00d 22:33:09
Wave 5       Up    Up      10Gb/s     -10.8 dBm 35.0 OK           00d 22:33:09
Wave 6       Up    Up      10Gb/s     -10.3 dBm 36.0 OK           00d 22:33:09
Wave 7       Up    Up      10Gb/s     -10.6 dBm 37.0 OK           00d 22:33:09
Wave 8       Up    Up      10Gb/s      -9.9 dBm 38.0 OK           00d 22:33:09
Wave 9       Up    Up      10Gb/s     -10.0 dBm 39.0 OK           00d 22:33:09
OSC West     Up    Up      100Mb/s    -19.5 dBm N/A  N/A          00d 22:33:09

> means the line state has not changed since DXMOS was restarted.
```

#### 6.2.3.2 Optional EDFA

Your DarkStar muxponder may have been configured with one or more EDFAs. Although EDFAs have their output power optimally set by XKL, make sure that there is sufficient input power to the EDFA. To do this, determine the receive power (RxPow) level of the EDFA by issuing a `show amplifier` command. Then refer to the EDFA minimum (Min) and maximum (Max) values for total operating input power (dBm) in Table B-6, EDFA Optical Specifications.

#### 6.2.3.3 Confirm Client Transceivers

XKL ships DSM10-10 systems with client transceivers already inserted. Confirm the insertion of these transceivers beginning with client position C0. **Note:** Other XKL models may not ship with client transceivers installed.



**When connecting a fiber cable, DO NOT clean both ends of the fiber cable at the same time. Rather, clean and insert one end of the fiber cable into the transceiver or adapter, then clean and insert the other end.**

#### 6.2.3.4 Determine Transceiver Type

To determine the line transceiver (i.e., DWDM) type on the system, use the `show modules` command. Wave 0 is shown in this example.

```
DSM10-10_Location1# show modules wave 0

Wave 0    Up
  Description: .... Seattle_to_Redmond
  Tx: ............. OK                          Rx: .......... OK
  State Changed: .. 00d 22:38:34               Channel: ..... 30.0
  Tx Laser: ....... Enabled                     Frequency: ... 193000 GHz
  Tx Power: ....... 0.0 dBm                     Wavelength: .. 1553.33 nm
  Rx Power: ....... -11.2 dBm                   Module Type: . Tunable SFP+
  Loopback: ....... Not Supported               Temperature: . 35 C
  Encapsulation: .. 10G Ethernet                Vendor: ...... JDSU
  Last Cleared: ... 00d 22:37:46                Part No.: .... JST01TMAC1CY5GEN
  Link Downtime: .. 00d 00:00:00                Serial No.: .. FE0855180025
  Maximum Reach: .. 80 km on SM                 MFG Date: .... 140303
  Idle Tx/Mute: ... Idle Tx
```

#### 6.2.3.5 Configuring Optical Transport Service for DSM10-10

The default DarkStar configuration does not include connections between client and wave interfaces. Customer equipment connects to the client interfaces, which in turn connect to the wave interfaces.

Once customer equipment has been connected to client ports using jumper fibers, the DarkStar system must be provisioned for transport service using the following procedure:

1. Enter enable mode and type `show connections` to display existing connections.
2. Choose a client and wave interface, for example, `client5` and `wave 5`. Using the same wave and client interfaces is recommended, unless your network strategy requires otherwise.
3. Type `configure` to enter configuration mode.
4. Type `connect client` *`5`* `wave` *`5`* `encapsulation` *`z`* (`5` is the client interface to be connected; the second `5` is the wave channel to be connected; `z` is the encapsulation type).
5. Connect to the remote DarkStar network on the other end of the fiber line and, using the same process, connect the same previously specified wave and client interfaces that terminate the remote network service.
6. Save the updated configuration with a `write memory` for each system. Each connection between a client and wave interface requires an encapsulation type. DXMOS displays the available encapsulation values for a particular interface.

**Note:** If encapsulation type is not specified, the connection will use a previously specified or default encapsulation type. In this scenario, if the previously specified or default encapsulation type matches the encapsulation type on the other connection, data will pass correctly. Alternatively, if the encapsulation types on each connection differ, the connection will fail to pass data.

## 6.2.4 DQM400-4

This section uses the DarkStar DQM400-4 muxponder as an example. Although the processes being described here are applicable to any DarkStar muxponder model, there may be some minor command line or descriptive differences. Figure 6-4 illustrates the connection of two DQM400-4 muxponders.

**Note:** DQM400-4 models use the channel count as part of their model name, so DQM400-4 means a DQM400 4 channel system.

**FIGURE 6-4. Connecting Two DQM400-4 Muxponders**

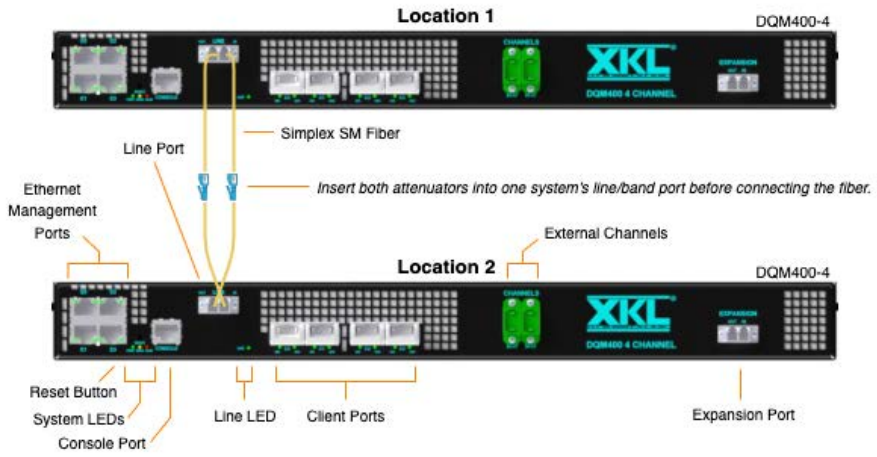


Insert external attenuators into one system's line port before connecting the fiber. In this example, we use an attenuator value of 15dB. This is to ensure that the line transceivers (i.e., DWDM) do not exceed the maximum receive power (RxPow). Confirm this by referring to Recommended Transceiver Sensitivity Levels. You can connect and configure client connections as soon as you have verified the line port link.

External Channels connect to mux/demux filter channels that are not occupied by wave transceivers internal to the DQM400. External sources can be attached to these. For example, a DQM400-4 configured with a 12-channel, 100 GHz spacing mux/demux that offers ITU channels 20-31 would connect wave transceivers to channels 20-23; channels 24-31 are then available by means of the External Channels connector. Data are multiplexed between the External Channels connector and the front panel Line port.

Expansion Port multiplexes any wavelengths between 1528nm - 1566nm (ITU channels 14 - 61) to the front panel Line port except for the previously mentioned 12 channels. Continuing the example above, data on ITU channels 14 - 19 and 32 - 61 can pass between External Port and the Line port.

When either the External Channels or the Expansion Port is used, DXMOS must be apprised of the total channel count so that it can adjust amplifiers. Use the DXMOS amplifier configuration command `Control Automatic Channel-count` to provide this information.

**Notes:**

- The attenuator value of 10-15dB is an acceptable range for a system with an EDFA. Issue the `show module wave 0 media-side` command to see the Rx Power and the max/min Rx Power, which is reported by the transceiver. Adjust the attenuator value to achieve the optimum value shown in Recommended Transceiver Sensitivity Levels.
- Depending on the customer equipment being attached, client transceivers may also require attenuators. Refer to Recommended Transceiver Sensitivity Levels for DarkStar equipment, and pertinent equipment documentation for the customer equipment.
- The rest of the section assumes that the equipment has been deployed in the field. However, if you are setting up the systems in a lab prior to deployment, the following process is the same.

#### 6.2.4.1 Verify the Line Port Link

To verify the line port link, issue the `show modules summary` command and confirm that the receive power (RxPow) for all line (wave) and OSC transceivers falls within an acceptable range. Alternatively, issue the command `show modules wave 0 media-side` and note the manufacturer's min/max Rx Power values. If the DQM400-4 was configured with an optional EDFA, pay special attention to the OSC RxPow value, as shown in the output below. Note that the RxPow for all of the waves is set by the EDFA, and not the attenuator shown in Figure 6-4. Only the OSC RxPow is determined by the attenuator value. Our example has an input EDFA installed in each DQM400-4 system. The value for the OSC RxPow should be very similar to the sample output below if the attenuator value is 15dB. If not, the fiber cable that you installed when you connected the line-side ports was not seated correctly or is not an SM fiber.

**Note:** Recommended RxPow power levels depend on the line transceiver (i.e., DWDM) type. For specifics, refer to Recommended Transceiver Sensitivity Levels or issue the command `show modules wave 0 media-side`. If your DarkStar muxponder has been configured with one or more EDFAs, see the section Optional EDFA.

> **Caution:** Excessive input power can cause link performance degradation or component damage.

The following output is from a DQM400-4 system.

```
DQM400-4_Location1# show modules summary
 Interface   Admin  Line    Rate       RxPow     Ch  Transceiver  Last Line Chg
------------ ----- ------- -------- ----------- ---- -----------  -------------
Client 0
 Lane 0      Up    Up      100Gb/s      2.2 dBm N/A  OK           01d 02:38:16
 Lane 1      Up    Up      100Gb/s      2.3 dBm N/A  OK           01d 02:38:16
 Lane 2      Up    Up      100Gb/s      1.9 dBm N/A  OK           01d 02:38:16
 Lane 3      Up    Up      100Gb/s      2.3 dBm N/A  OK           01d 02:38:16
Client 1
 Lane 0      Up    Up      100Gb/s      1.9 dBm N/A  OK           00d 02:12:54
 Lane 1      Up    Up      100Gb/s      2.6 dBm N/A  OK           00d 02:12:54
 Lane 2      Up    Up      100Gb/s      2.5 dBm N/A  OK           00d 02:12:54
 Lane 3      Up    Up      100Gb/s      2.3 dBm N/A  OK           00d 02:12:54
Client 2
 Lane 0      Up    Up      100Gb/s      2.7 dBm N/A  OK           04d 01:57:46
 Lane 1      Up    Up      100Gb/s      3.2 dBm N/A  OK           04d 01:57:46
 Lane 2      Up    Up      100Gb/s      2.5 dBm N/A  OK           04d 01:57:46
 Lane 3      Up    Up      100Gb/s      2.6 dBm N/A  OK           04d 01:57:46
Client 3
 Lane 0      Up    Up      100Gb/s      3.3 dBm N/A  OK           04d 19:43:49
 Lane 1      Up    Up      100Gb/s      2.0 dBm N/A  OK           04d 19:43:49
 Lane 2      Up    Up      100Gb/s      2.4 dBm N/A  OK           04d 19:43:49
 Lane 3      Up    Up      100Gb/s      2.1 dBm N/A  OK           04d 19:43:50
Wave 0
 Lane 0      Up    Up      400Gb/s     -7.5 dBm 25.0 OK           00d 04:37:14
```

```
Wave 1
 Lane 0      Up    Up      400Gb/s     -8.2 dBm 26.0 OK          00d 02:12:06
Wave 2
 Lane 0      Up    Up      400Gb/s     -7.9 dBm 27.0 OK          00d 04:35:15
Wave 3
 Lane 0      Up    Up      400Gb/s     -8.0 dBm 28.0 OK          00d 04:34:26
OSC 0        Up    Up      100Mb/s    -27.4 dBm N/A  N/A        04d 19:43:52

> means the line state has not changed since DXMOS was restarted.
```

#### 6.2.4.2 Optional EDFA

Your DarkStar muxponder may have been configured with one or more EDFAs. Although EDFAs have their output power optimally set by XKL, make sure that there is sufficient input power to the EDFA. To do this, determine the receive power (RxPow) level of the EDFA by issuing a `show amplifier` command. Then refer to the EDFA minimum (Min) and maximum (Max) values for total operating input power (dBm) in Table B-6, EDFA Optical Specifications.

#### 6.2.4.3 Confirm Client Transceivers

Some DarkStar models do not ship with the client transceivers installed in the system. Install the transceivers if necessary.



**When connecting a fiber cable, DO NOT clean both ends of the fiber cable at the same time. Rather, clean and insert one end of the fiber cable into the transceiver or adapter, then clean and insert the other end.**

#### 6.2.4.4 Determine Transceiver Type

To determine the line transceiver (i.e., DWDM) type on the system, use the `show modules` command. Wave 0 is shown in this example.

```
DQM400-4_Location1# show modules wave 0

Wave 0    Down
  Description: .... Seattle_to_Redmond
  Tx: ............. OK                          Rx: .......... OK
  State Changed: .. 00d 02:06:22                Channel: ..... 25.0
  Tx Laser: ....... Enabled                     Frequency: ... 192500 GHz
  Tx Power: ....... -8.7 dBm                    Wavelength: .. 1557.36 nm
  Rx Power: ....... -7.5 dBm                    Module Type: . Tunable OSFP
  Loopback: ....... Off                         Temperature: . 66 C
  Encapsulation: .. 400GAUI-8 ZR                Vendor: ...... Acacia Comm Inc.
  Last Cleared: ... 00 02:35:51                 Part No.: .... DP04SFP8-E30-001
  Link Downtime: .. 00 00:06:24                 Serial No.: .. 212855628
  Maximum Reach: .. Unknown                     MFG Date: .... 210721
  BERT Enabled: ... Transmit                    BERT Time: ... 00 00:00:00
```

#### 6.2.4.5 Configuring Optical Transport Service for DQM400

DQM400 models are delivered equipped with QSFP28 or QSFP-DD client modules. See the models that were purchased to confirm the transceiver type installed.

DXMOS running on DQM400 models have client-to-wave connections already in place. Client module 0 is dedicated to wave module 0, for example. The only setting that needs to be configured is the desired encapsulation. The available encapsulations are determined by the type of client module installed. To see the available encapsulation options, type the `encapsulation` command.

Once your equipment has been connected to client/lane ports using jumper fibers, the DarkStar system must be provisioned for transport service using the following procedure:

1. Enter enable mode and then type `configure` to enter configure mode.
2. Select a client to define the encapsulation; for example, `module client 0`.
3. Type `encapsulation` followed by <Tab> (or "?") to list the available encapsulation types. Select the desired type.
4. Connect to the remote DarkStar system on the other end of the fiber line and, using the same process, select the same encapsulation.
5. Save the updated configuration with a `write memory` for each system.

**Note:** There is a default encapsulation type if one is not specified by the user. Two DarkStar systems will not pass data if there is a mismatch in encapsulation types between the two systems. Make sure both systems have been configured similarly, using the same encapsulation type.

#### 6.2.4.6 Loss-of-Lock Forwarding

Loss-of-Lock Forwarding is supported between two DQM400 systems. In order for a loss-of-lock event to be forwarded, a local and remote DQM400 wave must be able to pass traffic to each other. When LOL is encountered by a client on a remote DQM400 system, the change in LOL status is forwarded to the receiving client on the local DQM400 system. DXMOS will issue console warning messages and log events when a LOL message is received. This feature is enabled by default and can be disabled by using the `lol-forward` command. See the Command Reference for more details.

In the event that the local and remote clients are both loop backed and indicate the remote end has gone down, both ends will have to be manually brought back up.

### 6.2.5 DFM400-12

This section uses the DarkStar DFM400-12 muxponder as an example. Although the processes being described here are applicable to any DarkStar muxponder model, there may be some minor command line or descriptive differences. Figure 6-5 illustrates the connection of two DFM400-12 muxponders.

**Note:** DFM400-12 models use the channel count as part of their model name, so DFM400-12 means a DFM400 12 channel system.

**FIGURE 6-5. Connecting Two DFM400-12 Muxponders**

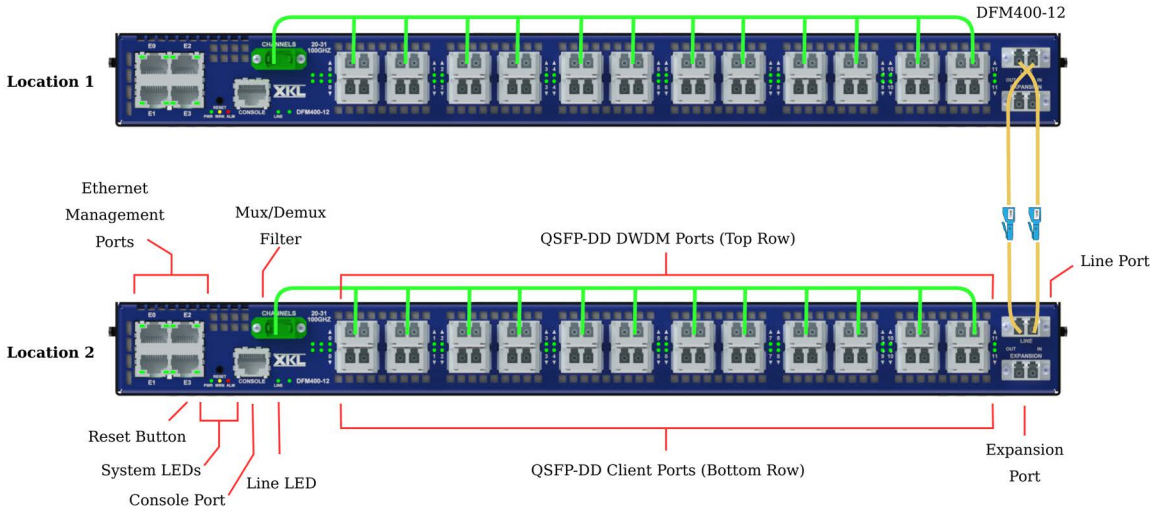


Insert external attenuators into one system's line port before connecting the fiber. In this example, we use an attenuator value of 15dB. This is to ensure that the line transceivers (i.e., DWDM) do not exceed the maximum receive power (RxPow). Confirm this by referring to Recommended Transceiver Sensitivity Levels. You can connect and configure client connections as soon as you have verified the line port link.

Expansion Port multiplexes any wavelengths between 1528nm - 1566nm (ITU channels 14 - 61) to the front panel Line port except for the previously mentioned 12 channels.

When the Expansion Port is used, DXMOS must be apprised of the total channel count so that it can adjust amplifiers. Use the DXMOS amplifier configuration command `control automatic channel-count` to provide this information.

**Notes:**

- The attenuator value of 10-15dB is an acceptable range for a system with an EDFA. Issue the `show modules {upper | lower} n media-side` command for a DWDM line model to see the Rx Power and the max/min Rx Power, which is reported by the transceiver. Adjust the attenuator value to achieve the optimum value shown in Recommended Transceiver Sensitivity Levels.
- Depending on the customer equipment being attached, client transceivers may also require attenuators. Refer to Recommended Transceiver Sensitivity Levels for DarkStar equipment, and pertinent equipment documentation for the customer equipment.

- The rest of the section assumes that the equipment has been deployed in the field. However, if you are setting up the systems in a lab prior to deployment, the following process is the same.

#### 6.2.5.1 Verify the Line Port Link

To verify the line port link, issue the `show modules summary` command and confirm that the receive power (RxPow) for all line (wave) and OSC transceivers falls within an acceptable range. Alternatively, issue the command `show modules {upper | lower} n media-side` for a DWDM line module and note the manufacturer's min/max Rx Power values. If the DFM400-12 was configured with an optional EDFA, pay special attention to the OSC RxPow value, as shown in the output below. Note that the RxPow for all of the waves is set by the EDFA, and not the attenuator shown in Figure 6-5. Only the OSC RxPow is determined by the attenuator value. Our example has an input EDFA installed in each DFM400-12 system. The value for the OSC RxPow should be very similar to the sample output below if the attenuator value is 15dB. If not, the fiber cable that you installed when you connected the line-side ports was not seated correctly or is not an SM fiber.

**Note:** Recommended RxPow power levels depend on the line transceiver (i.e., DWDM) type. For specifics, refer to Recommended Transceiver Sensitivity Levels or issue the command `show modules {upper | lower}`*`n`*`media-side`. If your DarkStar muxponder has been configured with one or more EDFAs, see the section Optional EDFA.

**Caution:** Excessive input power can cause link performance degradation or component damage.

The following output is from a DFM400-12 system.

```
DFM400-12_Location1# show modules summary
 Interface   Admin  Line    Rate       RxPow     Ch     Status    Last Line Chg
------------ ----- ------- -------- ----------- ------- --------  -------------
Lower 0
 Lane 0      Up    Up      100Gb/s      2.2 dBm N/A     OK        00d 19:05:01
 Lane 1      Up    Up      100Gb/s      2.3 dBm N/A     OK        00d 19:05:01
 Lane 2      Up    Up      100Gb/s      1.9 dBm N/A     OK        00d 19:05:00
 Lane 3      Up    Up      100Gb/s      2.0 dBm N/A     OK        00d 19:05:00
Lower 1
 Lane 0      Up    Up      100Gb/s      1.9 dBm N/A     OK        00d 19:11:30*
 Lane 1      Up    Up      100Gb/s      2.6 dBm N/A     OK        00d 19:11:30*
 Lane 2      Up    Up      100Gb/s      2.5 dBm N/A     OK        00d 19:11:30*
 Lane 3      Up    Up      100Gb/s      2.3 dBm N/A     OK        00d 19:11:30*
Lower 2
 Lane 0      Up    Up      100Gb/s      2.7 dBm N/A     OK        00d 19:11:30*
 Lane 1      Up    Up      100Gb/s      3.2 dBm N/A     OK        00d 19:11:30*
 Lane 2      Up    Up      100Gb/s      2.5 dBm N/A     OK        00d 19:11:30*
 Lane 3      Up    Up      100Gb/s      2.6 dBm N/A     OK        00d 19:11:30*
Lower 3
 Lane 0      Up    Up      100Gb/s      3.3 dBm N/A     OK        00d 19:11:30*
 Lane 1      Up    Up      100Gb/s      2.0 dBm N/A     OK        00d 19:11:30*
 Lane 2      Up    Up      100Gb/s      2.4 dBm N/A     OK        00d 19:11:30*
 Lane 3      Up    Up      100Gb/s      2.1 dBm N/A     OK        00d 19:11:30*
Lower 4
 Lane 0      Up    Up      100Gb/s      1.8 dBm N/A     OK        00d 19:11:30*
 Lane 1      Up    Up      100Gb/s      1.9 dBm N/A     OK        00d 19:11:30*
 Lane 2      Up    Up      100Gb/s      2.4 dBm N/A     OK        00d 19:11:30*
 Lane 3      Up    Up      100Gb/s      2.3 dBm N/A     OK        00d 19:11:30*
Lower 5
 Lane 0      Up    Up      100Gb/s      2.5 dBm N/A     OK        00d 19:11:30*
 Lane 1      Up    Up      100Gb/s      2.7 dBm N/A     OK        00d 19:11:30*
 Lane 2      Up    Up      100Gb/s      2.6 dBm N/A     OK        00d 19:11:31*
 Lane 3      Up    Up      100Gb/s      2.8 dBm N/A     OK        00d 19:11:31*
Lower 6
 Lane 0      Up    Up      100Gb/s      1.8 dBm N/A     OK        00d 19:11:31*
 Lane 1      Up    Up      100Gb/s      1.7 dBm N/A     OK        00d 19:11:31*
 Lane 2      Up    Up      100Gb/s      1.9 dBm N/A     OK        00d 19:11:31*
 Lane 3      Up    Up      100Gb/s      2.1 dBm N/A     OK        00d 19:11:31*
Lower 7
 Lane 0      Up    Up      100Gb/s      2.3 dBm N/A     OK        00d 19:11:31*
 Lane 1      Up    Up      100Gb/s      2.3 dBm N/A     OK        00d 19:11:31*
 Lane 2      Up    Up      100Gb/s      2.3 dBm N/A     OK        00d 19:11:31*
 Lane 3      Up    Up      100Gb/s      2.4 dBm N/A     OK        00d 19:11:31*
Lower 8
 Lane 0      Up    Up      100Gb/s      2.1 dBm N/A     OK        00d 19:11:31*
 Lane 1      Up    Up      100Gb/s      2.2 dBm N/A     OK        00d 19:11:31*
 Lane 2      Up    Up      100Gb/s      2.0 dBm N/A     OK        00d 19:11:31*
 Lane 3      Up    Up      100Gb/s      2.3 dBm N/A     OK        00d 19:11:31*
Lower 9
 Lane 0      Up    Up      100Gb/s      1.7 dBm N/A     OK        00d 19:11:31*
 Lane 1      Up    Up      100Gb/s      1.6 dBm N/A     OK        00d 19:11:31*
 Lane 2      Up    Up      100Gb/s      1.8 dBm N/A     OK        00d 19:11:31*
```

```
 Lane 3      Up    Up      100Gb/s      1.9 dBm N/A     OK        00d 19:11:31*
Lower 10
 Lane 0      Up    Up      100Gb/s      3.1 dBm N/A     OK        00d 19:11:31*
 Lane 1      Up    Up      100Gb/s      3.3 dBm N/A     OK        00d 19:11:32*
 Lane 2      Up    Up      100Gb/s      2.9 dBm N/A     OK        00d 19:11:32*
 Lane 3      Up    Up      100Gb/s      2.9 dBm N/A     OK        00d 19:11:32*
Lower 11
 Lane 0      Up    Up      100Gb/s      2.1 dBm N/A     OK        00d 19:11:30*
 Lane 1      Up    Up      100Gb/s      2.4 dBm N/A     OK        00d 19:11:30*
 Lane 2      Up    Up      100Gb/s      2.3 dBm N/A     OK        00d 19:11:30*
 Lane 3      Up    Up      100Gb/s      2.2 dBm N/A     OK        00d 19:11:30*
Upper 0
 Lane 0      Up    Up      400Gb/s     -4.0 dBm 20.0    OK        00d 19:11:32*
Upper 1
 Lane 0      Up    Up      400Gb/s     -3.7 dBm 21.0    OK        00d 19:11:32*
Upper 2
 Lane 0      Up    Up      400Gb/s     -4.5 dBm 22.0    OK        00d 19:11:33*
Upper 3
 Lane 0      Up    Up      400Gb/s     -5.2 dBm 23.0    OK        00d 19:11:33*
Upper 4
 Lane 0      Up    Up      400Gb/s     -6.2 dBm 24.0    OK        00d 19:11:33*
Upper 5
 Lane 0      Up    Up      400Gb/s     -6.2 dBm 25.0    OK        00d 19:11:34*
Upper 6
 Lane 0      Up    Up      400Gb/s     -6.3 dBm 26.0    OK        00d 19:11:34*
Upper 7
 Lane 0      Up    Up      400Gb/s     -6.0 dBm 27.0    OK        00d 19:11:34*
Upper 8
 Lane 0      Up    Up      400Gb/s     -7.5 dBm 28.0    OK        00d 19:11:34*
Upper 9
 Lane 0      Up    Up      400Gb/s     -6.4 dBm 29.0    OK        00d 19:11:34*
Upper 10
 Lane 0      Up    Up      400Gb/s     -8.1 dBm 30.0    OK        00d 19:11:35*
Upper 11
 Lane 0      Up    Up      400Gb/s     -7.8 dBm 31.0    OK        00d 19:11:35*
OSC 0        Up    Up      100Mb/s    -27.4 dBm N/A     N/A       00d 19:11:35*

* No state change since DXMOS started.
```

#### 6.2.5.2 Optional EDFA

Your DarkStar muxponder may have been configured with one or more EDFAs. Although EDFAs have their output power optimally set by XKL, make sure that there is sufficient input power to the EDFA. To do this, determine the receive power (RxPow) level of the EDFA by issuing a `show amplifier` command. Then refer to the EDFA minimum (Min) and maximum (Max) values for total operating input power (dBm) in Table B-6, EDFA Optical Specifications.

#### 6.2.5.3 Confirm Client Transceivers

Some DarkStar models do not ship with the client transceivers installed in the system. Install the transceivers if necessary.



**When connecting a fiber cable, DO NOT clean both ends of the fiber cable at the same time. Rather, clean and insert one end of the fiber cable into the transceiver or adapter, then clean and insert the other end.**

### 6.2.5.4 Determine Transceiver Type

To determine the line transceiver (i.e., DWDM) type on the system, use the `show modules` command. Upper 0 is shown in this example.

```
DFM400-12_Location1# show modules upper 0

Upper 0    Up
  Description: .... N/A
  Tx: ............. OK                          Rx: .......... OK
  State Changed: .. 00d 20:14:34*               Channel: ..... 20.0
  Tx Laser: ....... Enabled                     Frequency: ... 192000 GHz
  Tx Power: ....... -8.5 dBm                    Wavelength: .. 1561.42 nm
  Rx Power: ....... -4.0 dBm                    Module Type: . Tunable QSFP-DD
  Loopback: ....... Off                         Temperature: . 64 C
  Encapsulation: .. 4x100GAUI-2                 Vendor: ...... HG GENUINE
  Last Cleared: ... 00d 20:12:23                Part No.: .... CTR-D2F5C-A
  Link Downtime: .. 00d 00:00:00                Serial No.: .. 3000358260071
  Maximum Reach: .. Unknown                     MFG Date: .... 260508
  BERT Enabled: ... Transmit, Receive           BERT Time: ... 00d 20:05:17
  BERT Error Count: 0                           BERT Status: . OK
```

### 6.2.5.5 Configuring Optical Transport Service for DFM400

DFM400 models are delivered equipped with QSFP28 or QSFP-DD client modules. See the models that were purchased to confirm the transceiver type installed.

DXMOS running on DFM400 models have client-to-wave connections already in place. Lower module 0 is dedicated to upper module 0, for example. The only setting that needs to be configured is the desired encapsulation. The available encapsulations are determined by what encapsulations both transceivers share. To see the available encapsulation options, type the `encapsulation` command.

Once your equipment has been connected to client/lane ports using jumper fibers, the DarkStar system must be provisioned for transport service using the following procedure:

1. Enter enable mode and then type `configure` to enter configure mode.
2. Select a client to define the encapsulation; for example, `module lower 0`.
3. Type `encapsulation` followed by <Tab> (or "?") to list the available encapsulation types. Select the desired type.
4. Connect to the remote DarkStar system on the other end of the fiber line and, using the same process, select the same encapsulation.
5. Save the updated configuration with a `write memory` for each system.

**Note:** There is a default encapsulation type if one is not specified by the user. Two DarkStar systems will not pass data if there is a mismatch in encapsulation types between the two systems. Make sure both systems have been configured similarly, using the same encapsulation type.

# 6.3 Transponders

Addressed are the following system connections:

- DQT10
- DQT100
- DAT100-8
- DQT400-4
- DQT400-12
- DFX400-12

## 6.3.1 DQT10

This section uses the DQT10 12-channel transponder and the DMD-A with Line Protection as an example.

### 6.3.1.1 Connect the Transponders with the DMD-A Systems

Figure 6-6 illustrates the connection of two DQT10 12-channel transponders and their associated DMD systems, which in this example are the DMD-A (mux/demux with amplifier) models. Note that because this DMD-A also has Line Protection, it will use two line ports rather than just one.

**FIGURE 6-6. Connected Pair of DQT10 Transponder and DMD-A With Line Protection**

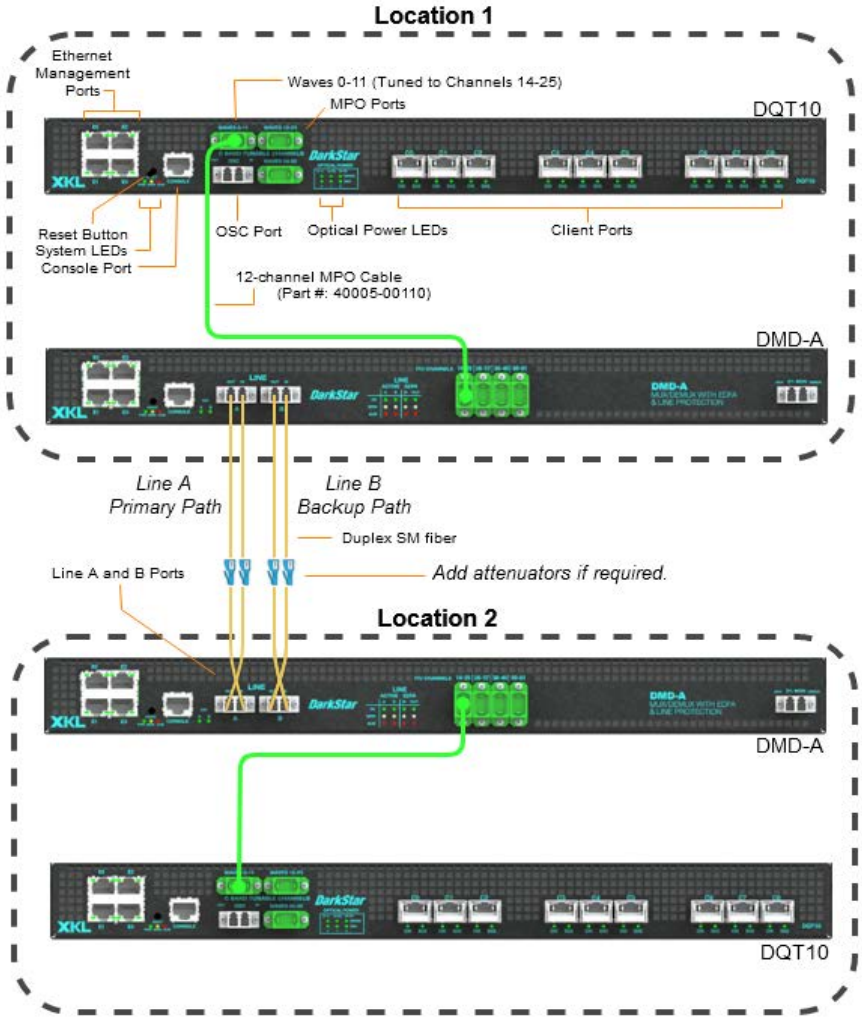


**Connection steps:**

1. Insert external attenuators, if required, into the DMD-A line ports. In this example, we use an attenuator value of 10dB to ensure that the line transceivers (i.e., DWDM) do not exceed the maximum receive power (RxPow). Confirm by referring to Recommended Transceiver Sensitivity Levels.
2. Connect the two DMD-A systems via their line ports as follows: Line A of one DMD-A to Line A of the other, then Line B to Line B. For details, see Mux/Demux with Amplifier System (DMD-A).
3. Using the `show modules OSC` command, verify the OSC transceiver Rx power in both DMD-A systems. The OSC transceiver should not be in a Loss of Signal (LOS) state, confirming that the Line A and Line B fiber connections were done correctly. Note that there are 4 OSC transceivers to check, two in each DMD-A.
4. Connect each transponder to a DMD-A with MPO breakout cable (shown as green in the example).
5. Set the wavelength of the tunable transceivers in all transponder systems.
6. Configure the amplifiers in the DMD-A systems using the `control automatic channel-count` command.
7. Enable all EDFAs in the DMD-A.

**Notes:**

- Depending on the customer equipment being attached, client transceivers may also require attenuators. Refer to Recommended Transceiver Sensitivity Levels for DarkStar equipment, and pertinent equipment documentation for the customer equipment.
- The rest of the section assumes that the equipment has been deployed in the field. However, if you are setting up the systems in a lab prior to deployment, the following process is the same.

#### 6.3.1.2 Tune Line Transceivers

For DarkStar transponder systems, you must tune all line transceivers (i.e., DWDM) the very first time that the system starts and then save this information to the system configuration file with the `write memory` command. Otherwise, these tunable transceivers will be left untuned, as there are no default wavelength settings.

The `tune-for-dmd` command allows you to match a group of selected channels of the DMD-A with the waves of the transponder. For example, consider the DQT10 and DMD-A connection shown in Figure 6-6. Here, the green MPO cable connects the line transceivers ("Waves 0-11") of DQT10 with the "Channels 14-25" of the DMD-A. The corresponding command on the DQT10 system at Location 1 (for 100GHz spacing per Figure 6-6) is as follows:

```
DQT10_Location1 CONF# tune-for-dmd wave 00-11 spacing 100GHz channel-group 14-25
```

In the configuration file, this `tune-for-dmd` command results in 12 separate tune commands. Also, issue the same command on DQT10_Location2.

#### 6.3.1.3 Verify the DMD-A Line Port Link

To verify the line port link, issue the `show modules summary` command and confirm that the receive power (RxPow) for all line (wave) and OSC transceivers falls within an acceptable range. Alternatively, issue the command `show modules wave 0 verbose` and note the manufacturer's min/max Rx Power values. If the DQT10 was connected to a DMD-A (having an EDFA), pay special attention to the OSC RxPow value, as shown in the output below. Note that the RxPow for all of the waves is set by the EDFA, and not the attenuator shown in Figure 6-6. Only the OSC RxPow is determined by the attenuator value. Our example has a DMD-A (input EDFA) connected to each DQT10 system. The value for the OSC RxPow should be very similar to the sample output below if the attenuator value is 15dB. If not, either a fiber cable that you installed when you connected a line-side port of the DMD-A was not seated correctly, the fiber was not single-mode, or an MPO cable was not properly seated.

If the DMD-A has the Line Protection feature, as shown in the example in Figure 6-6, then the last step to setting up your system is to enable the Line Protection feature. This is accomplished by issuing the `protection enable` command. Follow this with the `show protection` command to confirm the state of the Line Protection Feature.

**Note:** Recommended RxPow power levels depend on the line transceiver (i.e., DWDM) type. For specifics, refer to Recommended Transceiver Sensitivity Levels or issue the command `show modules wave 0 verbose`. If your DarkStar muxponder has been configured with one or more EDFAs, see the section Optional EDFA.

> **Caution:** Excessive input power can cause link performance degradation or component damage.

The following output is from a DQT10 12-channel system connected to a DMD-A system at Location 1, as shown in Figure 6-6.

```
DQT10_Location1# show modules summary
 Interface   Admin  Line    Rate       RxPow     Ch  Transceiver  Last Line Chg
------------ ----- ------- -------- ----------- ---- -----------  -------------
Client 0
 Lane 0      Up    Up      10Gb/s      -5.7 dBm N/A  OK           00d 19:57:54
 Lane 1      Up    Up      10Gb/s      -5.3 dBm N/A  OK           00d 19:57:55
 Lane 2      Up    Up      10Gb/s      -5.9 dBm N/A  OK           00d 19:57:55
 Lane 3      Up    Up      10Gb/s      -5.0 dBm N/A  OK           00d 19:57:55
Client 1
 Lane 0      Up    Up      10Gb/s      -6.1 dBm N/A  OK           00d 19:57:55
 Lane 1      Up    Up      10Gb/s      -5.8 dBm N/A  OK           00d 19:57:55
 Lane 2      Up    Up      10Gb/s      -5.6 dBm N/A  OK           00d 19:57:55
 Lane 3      Up    Up      10Gb/s      -6.0 dBm N/A  OK           00d 19:57:55
Client 2
 Lane 0      Up    Up      10Gb/s      -5.2 dBm N/A  OK           00d 19:57:55
 Lane 1      Up    Up      10Gb/s      -5.1 dBm N/A  OK           00d 19:57:55
 Lane 2      Up    Up      10Gb/s      -5.5 dBm N/A  OK           00d 19:57:55
 Lane 3      Up    Up      10Gb/s      -5.8 dBm N/A  OK           00d 19:57:55
Wave 0       Up    Up      10Gb/s      -9.4 dBm 20.0 OK           00d 19:57:55
Wave 1       Up    Up      10Gb/s      -9.7 dBm 21.0 OK           00d 19:57:55
Wave 2       Up    Up      10Gb/s      -9.2 dBm 22.0 OK           00d 19:57:55
Wave 3       Up    Up      10Gb/s      -8.7 dBm 23.0 OK           00d 19:57:55
Wave 4       Up    Up      10Gb/s      -8.9 dBm 24.0 OK           00d 19:57:55
Wave 5       Up    Up      10Gb/s      -8.6 dBm 25.0 OK           00d 19:57:55
Wave 6       Up    Up      10Gb/s      -8.8 dBm 26.0 OK           00d 19:51:19
Wave 7       Up    Up      10Gb/s      -9.0 dBm 27.0 OK           00d 19:51:19
Wave 8       Up    Up      10Gb/s      -8.7 dBm 28.0 OK           00d 19:45:11
Wave 9       Up    Up      10Gb/s      -9.1 dBm 29.0 OK           00d 19:57:55
Wave 10      Up    Up      10Gb/s      -8.5 dBm 30.0 OK           00d 19:46:56
Wave 11      Up    Up      10Gb/s      -9.3 dBm 31.0 OK           00d 19:51:20
OSC 0        Up    Up      100Mb/s    -25.6 dBm N/A  N/A         00d 19:57:56

> means the line state has not changed since DXMOS was restarted.
```

#### 6.3.1.4 Confirm Client Transceivers

Some DarkStar models do not ship with the client transceivers installed in the system. Install the transceivers if necessary.



**In a single step for each optical connector, clean the fiber and insert it into the transceiver or adapter. DO NOT clean both ends of the fiber cable at the same time. Rather, clean and insert one end of the fiber cable, then clean and insert the other end.**

#### 6.3.1.5 Determine Transceiver Type

To determine the line transceiver (i.e., DWDM) type on the system, use the `show modules` command. Wave 0 is shown in this example for the DQT10 system at Location 1.

```
DQT10_Location1# show modules wave 0

Wave 0    Up
  Description: .... Seattle_to_Redmond
  Tx: ............. OK                          Rx: .......... LOS
  State Changed: .. 00d 20:00:30                Channel: ..... 14.0
  Tx Laser: ....... Enabled                     Frequency: ... 191400 GHz
  Tx Power: ....... 0.0 dBm                     Wavelength: .. 1566.31 nm
  Rx Power: ....... -9.4 dBm                    Module Type: . Tunable SFP+
  Loopback: ....... Not Supported               Temperature: . 37 C
  Encapsulation: .. 10G Ethernet                Vendor: ...... JDSU
  Last Cleared: ... 00d 19:54:35                Part No.: .... JST01TMAC1CY5GEN
  Link Downtime: .. 00d 20:00:30                Serial No.: .. FE265518003D
  Maximum Reach: .. 80 km on SM                 MFG Date: .... 140624
  Idle Tx/Mute: ... Idle Tx
```

#### 6.3.1.6 Configuring Optical Transport Service for DQT10

DQT10 models are delivered equipped with QSFP+ client modules. Each client module provides four client lanes. Each client lane can be configured to a variety of data rates and encapsulation types. The default DarkStar configuration does not include connections between client lanes and wave interfaces.

DXMOS running on DQT10 models provides client-to-wave connections as individually-configured client/lane connections to single wave interfaces. A 40Gb Ethernet connection across the transport switch is possible as a collection of four client/lane connections to four wave interfaces. Each connection must be configured with its own `connect` command.

Lane notation is `int/lane`, (e.g., `client 1/3`, meaning `lane` *3* of interface `client` *1*). QSFP+ lanes are numbered 0 through 3.

Once your equipment has been connected to client/lane ports using jumper fibers, the DarkStar system must be provisioned for transport service using the following procedure:

1. Enter enable mode and type `show connections` to display existing connections.
2. Choose a client/lane and wave interface, for example, `client 1/3` and `wave 5`.
3. Type `configure` to enter configuration mode.
4. Type `connect client 1/3 wave 5 encapsulation z` (`1` is the client interface to be connected; `3` is the client lane selected; `5` is the wave channel to be connected; `z` is the encapsulation type).
5. Connect to the remote DarkStar network on the other end of the fiber line and, using the same process, connect the same previously specified wave and client interfaces that terminate the remote network service.
6. Save the updated configuration with a `write memory` for each system.

**Note:** All QSFP+ configuration commands are available at the lane level. All but `label description` are available at the module level, and they are shorthand to apply the setting to all lanes in the module. Similarly, the `show` command can be executed against an interface or a lane of an interface.

The following example shows some client/lane and wave connections.

```
localhost# show connections

10G Switch Complex connections:
Idx   If1           If2            Channel   If1 Line / Rate     If2 Line / Rate
```

```
---   ------------ -------------  -------   -----------------   -----------------
0     Client 0/0    Wave 0           20.0      Alarm   /10GE       Up      /10GE
1     Client 0/1    Wave 1           21.0      Alarm   /10GE       Up      /10GE
2     Client 0/2    Wave 2           22.0      Alarm   /10GE       Up      /10GE
3     Client 0/3    Wave 3           23.0      Alarm   /10GE       Up      /10GE
4     Client 1/1    Wave 4           24.0      Alarm   /10GE       Up      /10GE
5     Client 2/0    Wave 8           28.0      Alarm   /10GE       Up      /10GE
6     Client 2/1    Wave 9           29.0      Alarm   /10GE       Up      /10GE
localhost CONF# connect client 1/0 wave 5 encapsulation 10gigabitethernet
Switch Connect: Connection successful (Client 1/0, Wave 5)
localhost CONF#
```

## 6.3.2 DQT100

This section uses the DarkStar DQT100 2-channel transponder and the DMD-A with Line Protection as an example.

### 6.3.2.1 Connect the Transponders with the DMD-A Systems

Figure 6-7 illustrates the connection of two DQT100 2-channel transponders and their associated DMD systems, which in this example are the DMD-A (mux/demux with amplifier) models. Because this DMD-A also has Line Protection , it will use two line ports rather than just one.

**Note:** See XKL Sales for specific DMD cables used in your application.

**FIGURE 6-7. Connected Pair of DQT100 Transponder and DMD-A With Line Protection**

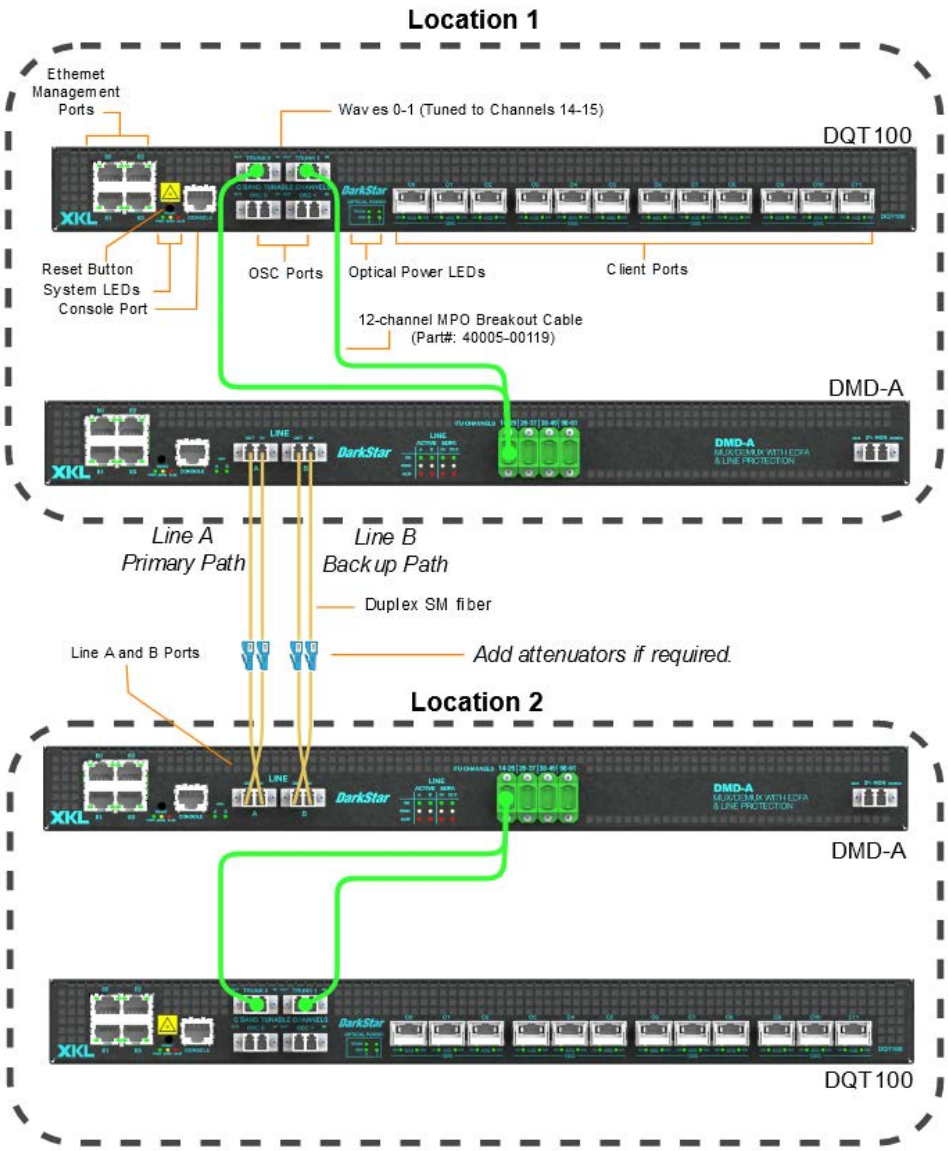

**Connection steps:**

1. Insert external attenuators, if required, into the DMD-A line ports. In this example, we use an attenuator value of 10dB to ensure that the line transceivers (i.e., DWDM) do not exceed the maximum receive power (RxPow). Confirm by referring to Recommended Transceiver Sensitivity Levels.
2. Connect the two DMD-A systems via their line ports as follows: Line A of one DMD-A to Line A of the other, then Line B to Line B. For details, see Mux/Demux with Amplifier System (DMD-A).
3. Using the `show modules OSC` command, verify the OSC transceiver Rx power in both DMD-A systems. The OSC transceiver should not be in a Loss of Signal (LOS) state, confirming that the Line A and Line B fiber connections were done correctly. Note that there are 4 OSC transceivers to check, two in each DMD-A.
4. Connect each transponder to a DMD-A with MPO breakout cable (shown as green in the example).
5. Set the wavelength of the tunable transceivers in all transponder systems. See Tune Line Transceivers.
6. Configure the amplifiers in the DMD-A systems using the `control automatic channel-count` command.
7. Enable all EDFAs in the DMD-A.

**Notes:**

- Depending on the customer equipment being attached, client transceivers may also require attenuators. Refer to Recommended Transceiver Sensitivity Levels for DarkStar equipment, and pertinent equipment documentation for the customer equipment.
- The rest of the section assumes that the equipment has been deployed in the field. However, if you are setting up the systems in a lab prior to deployment, the following process is the same.

#### 6.3.2.2 Tune Line Transceivers

For DarkStar transponder systems, you must tune all line transceivers (i.e., DWDM) the very first time that the system starts and then save this information to the system configuration file with the `write memory` command. Otherwise, these tunable transceivers will be left untuned, as there are no default wavelength settings.

The `tune channel` command enables you to match the corresponding channel of the DMD-A with the waves of the transponder. For example, consider the DQT100 and DMD-A connection shown in Figure 6-7. Here, the green MPO cable connects the trunks (line transceivers) of the transponder to the "Channels 14-25" of the DMD-A. The corresponding command entered at Location 1 is as follows:

`DQT100_Location1 CONF-MOD-TRUNK[0]#` **tune channel 14.0**

In the configuration file, this `tune channel` command will be only for "Wave 0." For "Wave 1"(i.e., Trunk 1 in our example), a separate `tune channel` command must be issued.

`DQT100_Location1 CONF-MOD-TRUNK[1]#` **tune channel 15.0**

Repeat these commands for Trunk 0 and Trunk 1 in DQT100_Location2. Note that these are 100GHz-spaced channels.

### 6.3.2.3 Verify the DMD-A Line Port Link

To verify the line port link, issue the `show modules summary` command and confirm that the receive power (RxPow) for all trunk (wave) and OSC transceivers falls within an acceptable range. Alternatively, issue the command `show modules wave 0 verbose` and note the manufacturer's min/max Rx Power values. If the DQT100 was connected to a DMD-A (having an EDFA), pay special attention to the OSC RxPow value, as shown in the output below. Note that the RxPow for the trunks (waves) is set by the EDFA, and not the attenuator shown in Figure 6-7. Only the OSC RxPow is determined by the attenuator value. Our example has a DMD-A (input EDFA) connected to each DQT100 system. The value for the OSC RxPow should be very similar to the sample output below if the attenuator value is 15dB. If not, either a fiber cable that you installed when you connected a line-side port of the DMD-A was not seated correctly, the fiber was not single-mode, or an MPO cable was not properly seated.

If the DMD-A has the Line Protection feature, as shown in the example in Figure 6-7, then the last step to setting up your system is to enable the Line Protection feature. This is accomplished by issuing the `protection enable` command. Follow this with the `show protection` command to confirm the state of the Line Protection.

**Note:** Recommended RxPow power levels depend on the line transceiver (i.e., DWDM) type. For specifics, refer to Recommended Transceiver Sensitivity Levels or issue the command `show modules wave 0 verbose`. If your DarkStar muxponder has been configured with one or more EDFAs, see the section Optional EDFA.

**Caution:** Excessive input power can cause link performance degradation or component damage.

The following output is from a DQT100 2-channel system.

```
DQT100_Location1# show modules summary
 Interface   Admin  Line    Rate       RxPow     Ch  Transceiver  Last Line Chg
------------ ----- ------- -------- ----------- ---- -----------  -------------
Client 0
 Lane 0      Up    Up      10Gb/s      -5.1 dBm N/A  OK           00d 03:51:05
 Lane 1      Up    Up      10Gb/s      -5.4 dBm N/A  OK           00d 03:51:05
 Lane 2      Up    Up      10Gb/s      -5.8 dBm N/A  OK           00d 03:51:05
 Lane 3      Up    Up      10Gb/s      -6.1 dBm N/A  OK           00d 03:51:05
Client 1
 Lane 0      Up    Up      10Gb/s      -5.5 dBm N/A  OK           00d 03:51:05
 Lane 1      Up    Up      10Gb/s      -5.3 dBm N/A  OK           00d 03:51:05
 Lane 2      Up    Up      10Gb/s      -5.9 dBm N/A  OK           00d 03:51:05
 Lane 3      Up    Up      10Gb/s      -5.4 dBm N/A  OK           00d 03:51:05
Client 2
 Lane 0      Up    Up      10Gb/s      -5.7 dBm N/A  OK           00d 03:51:05
 Lane 1      Up    Up      10Gb/s      -5.2 dBm N/A  OK           00d 03:51:05
 Lane 2      Up    Up      10Gb/s      -5.6 dBm N/A  OK           00d 03:51:05
 Lane 3      Up    Up      10Gb/s      -5.3 dBm N/A  OK           00d 03:51:05
Client 3
 Lane 0      Up    Up      10Gb/s      -6.1 dBm N/A  OK           00d 03:51:05
 Lane 1      Up    Up      10Gb/s      -6.3 dBm N/A  OK           00d 03:51:05
 Lane 2      Up    Up      10Gb/s      -5.7 dBm N/A  OK           00d 03:51:05
 Lane 3      Up    Up      10Gb/s      -6.0 dBm N/A  OK           00d 03:51:05
Client 4
 Lane 0      Up    Up      10Gb/s      -5.0 dBm N/A  OK           00d 03:51:05
 Lane 1      Up    Up      10Gb/s      -5.6 dBm N/A  OK           00d 03:51:05
 Lane 2      Up    Up      10Gb/s      -5.9 dBm N/A  OK           00d 03:51:05
 Lane 3      Up    Up      10Gb/s      -6.2 dBm N/A  OK           00d 03:51:05
Client 5     Up    Up      10Gb/s      -5.5 dBm N/A  OK           00d 03:51:05
Trunk 0
 Lane 0      Up    Up      N/A        -12.9 dBm 20.0 OK           00d 00:00:01
```

```
Trunk 1
 Lane 0       Up    Up       N/A         -13.2 dBm 21.0 OK            00d 03:51:05
OSC 0         Up    Up    100Mb/s         -8.5 dBm N/A  N/A           00d 03:51:05
OSC 1         Up    Up    100Mb/s         -8.3 dBm N/A  N/A           00d 03:51:05

> means the line state has not changed since DXMOS was restarted.
```

#### 6.3.2.4 Confirm Client Transceivers

Some DarkStar models do not ship with the client transceivers installed in the system. Install the transceivers if necessary.



**In a single step for each optical connector, clean the fiber and insert it into the transceiver or adapter. DO NOT clean both ends of the fiber cable at the same time. Rather, clean and insert one end of the fiber cable, then clean and insert the other end.**

#### 6.3.2.5 Determine Transceiver Type

To determine the line transceiver (i.e., DWDM) type on the system, use the `show modules trunk` command. Wave 0 is shown in this example.

```
DQT100_Location1# show modules trunk 0
Trunk 0     Up
  Description: .... Seattle_to_Redmond
  Tx: ............. OK                          Rx: .......... LOL
  State Changed: .. 00d 00:00:01                Channel: ..... 13.5
  Tx Laser: ....... Enabled                     Frequency: ... 191350 GHz
  Tx Power: ....... 2.6 dBm                     Wavelength: .. 1566.72 nm
  Rx Power: ....... -12.9 dBm                   Module Type: . Tunable CFP
  Loopback: ....... N/A                         Temperature: . 59 C
  Encapsulation: .. Undefined                   Vendor: ...... FUJITSU
  Last Cleared: ... 00d 04:26:19                Part No.: .... FIM38100/100
  Link Downtime: .. 00d 02:03:51                Serial No.: .. 38100100C4000Z
  Maximum Reach: .. Unknown                     MFG Date: .... 20170213
```

### 6.3.2.6 Configuring Optical Transport Service for DQT100

The DQT100 does not include any default connections from any client ports. All DQT100 systems must be configured to enable connections between systems. **Note:** All names specified are for example purposes only. See SpectraPath Provisioner Pair Configuration Example.

1. Enter enable mode.
2. Type `configure` to enter configuration mode.
3. Configure the network topology by first entering the "switch" section of the configuration mode.

   `CONF#` **switch**

   `CONF-SWITCH#`

4. Define an ID, and optionally, an alias for each DQT100 system in the network. This is accomplished using the "local-system" command on each system (via console or VTY).
   - Define an ID for the local system.

     The ID must be an integer value in the range 1 to 63. Each system involved in the network must have a unique ID (normally 1,2,3,4,5, and so on). It is the ID that gets passed between systems for routing packets.

     `CONF-SWITCH#` **local-system id** {*id*}

     For example: **local-system id** *1*

   - **[OPTIONAL] Defining an "alias system" list**

     For each system in the list, you can create alias names for the IDs that you previously defined above (i.e., `id` *1*, `id` *2*, `id` *3*, etc.).

     `CONF-SWITCH#` **alias system id** {*id*} **name** {*SystemName*}

     For example:

     **alias system id** *1* **name** *System1*
     ... results in the local-system named *System1.*

     **Note:** For the rest of this section, we use a generic local alias, *System1*. Usually, however, more specific names are appropriate when creating local system aliases (e.g., **alias system id** *1* **name** *Seattle*).

   Repeat this step for each DQT100 system in the network before moving on to define the remote systems.

5. Define the remote systems for each DQT100 system in the network, as required.

   For example:

   **alias system id** *2* **name** *System2*
   ...results in the remote system named *System2*.

   **Note:** For the rest of this section, we use generic remote aliases (e.g., *System2, System3, etc.). However*, more specific names are appropriate when creating remote aliases (e.g., **alias system id** *2* **name** *Spokane*, **alias system id** *3* **name** *Missoula*, etc.).

6. Set up the network topology for each DQT100 system by using the `next-hop` command. This command defines the links between each trunk port of the current system and the adjacent systems.

   `CONF-SWITCH#` **next-hop system** {*name*} **via trunk** {*0,1*}

   **Note:** The next hop for all systems must be defined with the `next-hop system` command, which lays out the system-to-system routes. Each system can only be defined once, but multiple systems can be defined to connect to the same trunk port.

   **Example:**
   Consider a 5-node ring where we send traffic from the local-system, *System1*, to the remote systems named *System2*, *System3*, and *System4*—all out of trunk 0:

   `CONF-SWITCH#` **local-system** *System1*

   `CONF-SWITCH#` **next-hop system** *System2* **via trunk** *0*

CONF-SWITCH# **next-hop system** *System3* **via trunk** *0*

CONF-SWITCH# **next-hop system** *System4* **via trunk** *0*

We also want to send traffic from the local-system, *System1*, to the remote *System5* out of trunk *1*.

CONF-SWITCH# **next-hop system** *System5* **via trunk** *1*

Repeat Steps 5 and 6 for each DQT100 system in the network, as required.

**7.** Configure the virtual interfaces (VIFs).

Services are configured on the DQT100 using virtual interfaces (VIFs). Each client is assigned a local virtual interface name, and the system and client port of the remote end is assigned a remote virtual interface name.

There are up to six client transceivers (ports 0-5) in a DQT100. Each client transceiver is a QSFP+, which has 4 lanes (0-3). VIFs are numbers from 0 to 23 and are used in a DQT100 system to specify a unique client/lane.

Table 6-2 shows the Client VIFs (0-23) used to specify a unique client/lane. In other words, each VIF in the table represents the intersection of a particular client column with a particular lane row. For example, the VIF number "5" in "Client 5" corresponds to Client Transceiver 1, Lane 1.

**TABLE 6-2. Client VIF Number Table**

| | | Client Transceiver | | | | | |
|---|---|---|---|---|---|---|---|
| | | **0** | **1** | **2** | **3** | **4** | **5** |
| **Lane** | **0** | 0 | 4 | 8 | 12 | 16 | 20 |
| | **1** | 1 | 5 | 9 | 13 | 17 | 21 |
| | **2** | 2 | 6 | 10 | 14 | 18 | 22 |
| | **3** | 3 | 7 | 11 | 15 | 19 | 23 |

The following command connects the local virtual interface to the remote virtual interface. In this command, we assign the client VIF numbers (0-23), a remote destination ("dest") ID or optional remote-system name and, if desired, an optional description ("desc"). For the remote destination (i.e., "dest"), the remote-system ID (e.g., `id` *2*, `id` *3*, etc.) is required if the optional remote system name (e.g., *System2*, *System3*, etc.) is not used.

CONF-SWITCH# **destination local-vif client** {*VIFnumber*} **remote-system** {*dest*} **remote-vif client** {*VIFnumber*} [*description* {*desc*}]

**[OPTIONAL] Using VIF "alias" commands**

As an alternative to the command above, use the following steps to create an alias for the local and remote VIF clients:

**a.** Create a local virtual interface alias specifying the client VIF number, assigning a unique VIF name and, if desired, adding a description.

CONF-SWITCH# **alias local-vif client** {*VIFnumber*} **name** {*localVIFname*} [*description* {*desc*}]

**b.** Create a remote virtual interface alias specifying the remote destination ("dest") ID or optional remote-system name, specifying a client VIF number, and assigning a unique VIF name.

CONF-SWITCH# **alias remote-vif** {*dest*} **client** {*VIFnumber*} **name** {*remoteVIFname*}

**c.** Connect the local virtual interface to the remote virtual interface and assign a unique optical-transport service name for the description.

CONF-SWITCH# **destination local-vif** {*localVIFname*} **remote-vif** {*remoteVIFname*} [*description* {*desc*}]

**Example:** Consider the following scenario where two optical transport services are being configured. Call the first service ***Sys1-client 0 to Sys2- client 0***, the second service ***Sys1-client 1 to Sys3-client 0***. In a "real-world" scenario, the descriptions would be more specific, such as describing the client traffic hooked up to the client port.

Steps:

- Create the local virtual interface (Step 7a).

First service:
`CONF-SWITCH#` **alias local-vif client** *0* **name** *Sys1-client0* **description** *"Sys1-client0 to Sys2-client0"*

Second service:
`CONF-SWITCH#` **alias local-vif client** *1* **name** *Sys1-client1* **description** *"Sys1-client1 to Sys3-client0"*

- Create the remote virtual interface (Step 7b).

  First service:
  `CONF-SWITCH#` **alias remote-vif** *System2* **client** *0* **name** *Sys2-client0*.

  Second service:
  `CONF-SWITCH#` **alias remote-vif** *System3* **client** *0* **name** *Sys3-client0*

- Connect the local virtual interface to the remote virtual interface and assign a unique service name (Step 7c).

  First service:
  `CONF-SWITCH#` **destination local-vif** *Sys1-client0* **remote-vif** *Sys2-client0* **description** *"Sys1-client0 to Sys2-client0"*

  Second service:
  *`CONF-SWITCH#`* **destination local-vif** *Sys1-client1* **remote-vif** *Sys3-client0* **description** *"Sys1-client1 to Sys3-client0"*

**8.** Exit the switch configuration.

```
CONF-SWITCH# exit
CONF#
```

**9.** Login to the remote DarkStar system and configure that system as well.

**10.** Save the updated configuration with a `write memory` for each system.

## 6.3.3 DAT100-8

This section provides several example use cases for the DarkStar Aggregation Transponder, DAT100-8.

### 6.3.3.1 Connect the DAT100-8 in a point-to-point Topology

Figure 6-8 illustrates the connection of two DAT100-8 systems. The supported reach between sites will depend on the type of installed line transceiver. The supported transceivers are 100GBase DR+ (2km), LR (10km), and coherent ZR (120km). In this example, the DAT100-8 is aggregating 8 x 10GE handoffs and transporting these circuits as a 100G signal.

**FIGURE 6-8. Connected Pair of DAT100-8 Systems**

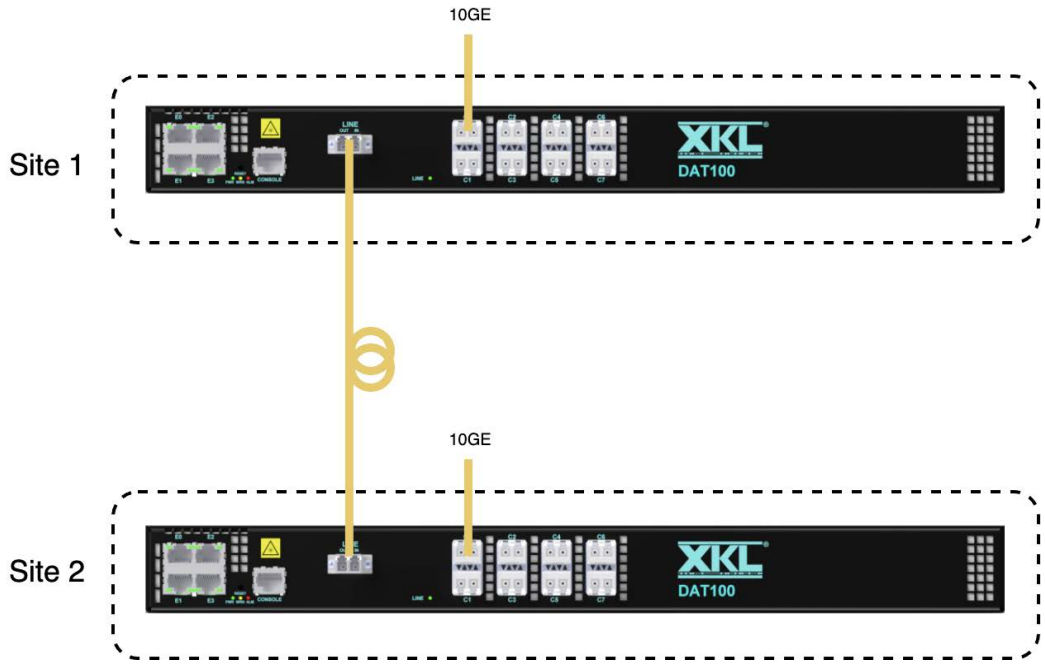

An example of a DAT100-8 using DWDM line transceivers is shown in Figure 6-9. In this example, 16 x 10GE handoffs are aggregated and transported as 2 x 100G DWDM signals.

**FIGURE 6-9. Combining Multiple DAT100-8 Systems using DWDM Line Transceivers**

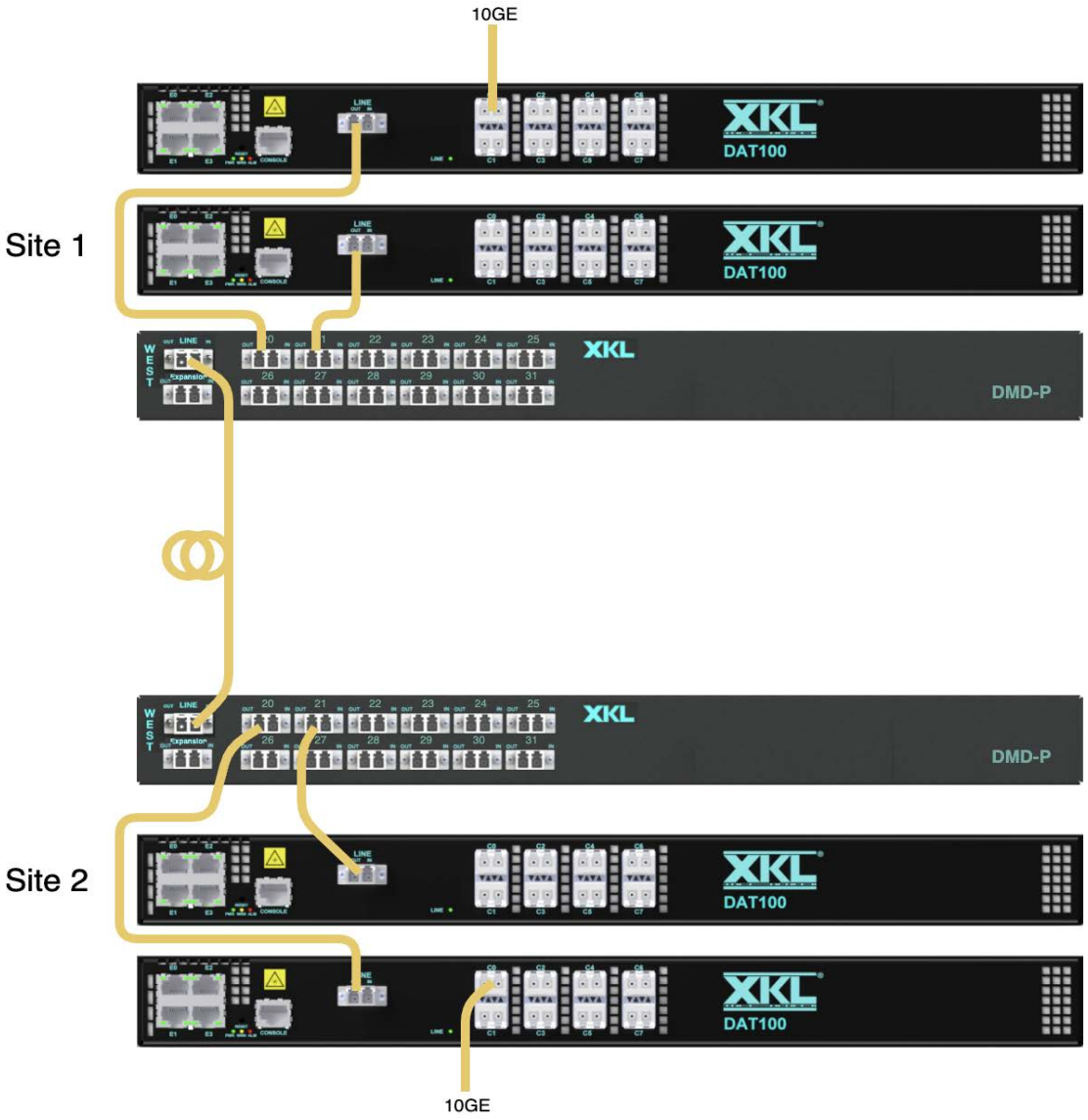

An example of a DAT100-8 providing a 100G handoff to a DQM400-4 system is shown in Figure 6-10. In this example, 8 x 10GE handoffs are aggregated and transported along with 3 x 100GE handoffs.

**FIGURE 6-10. Combining DAT100-8 System and DQM400-4**

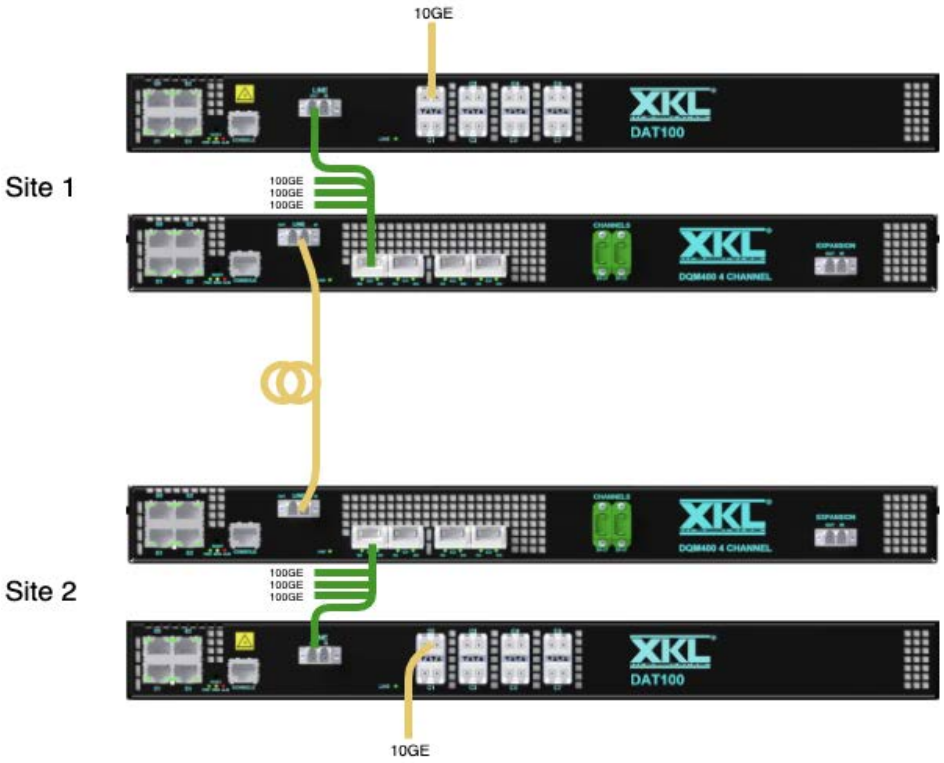


Connection Steps:

1. Insert external attenuators onto the DAT100-8 line port, if required. Do not exceed the maximum receive power (RxPow) of the line transceiver. Confirm by referring to Recommended Transceiver Sensitivity Levels.
2. Using the `show modules OSC` command, verify the OSC transceiver Rx power in both DAT100-8 systems, if installed. The OSC transceiver should not be in a Loss of Signal (LOS) state, confirming that the Line fiber connection was done correctly. Note that there is 1 OSC transceiver to check, one in each DAT100-8.
3. Set the wavelength of the tunable line-side transceiver in each DAT100-8 systems, if installed.

Notes:

- Depending on the customer equipment being attached, client transceivers may also require attenuators. Refer to Recommended Transceiver Sensitivity Levels for DarkStar equipment, and pertinent equipment documentation for the customer equipment.
- The rest of the section assumes that the equipment has been deployed in the field. However, if you are setting up the systems in a lab prior to deployment, the following process is the same.

#### 6.3.3.2 Tune Line Transceiver, if Applicable

For DarkStar transponder systems with tunable DWDM transceivers, you must tune the line transceivers (i.e., DWDM) the first time the system starts and then save this information to the system configuration file with the `write memory` command. Otherwise, these tunable transceivers will be left untuned, as there are no default wavelength settings.

#### 6.3.3.3 Verify the Line Port Link

To verify the line port link, issue the `show modules summary` command to confirm that the receive power (RxPow) for the line (wave) transceiver and client transceivers falls within an acceptable range. Alternatively, issue the command `show modules wave 0 media-side` and note the manufacturer's min/max Rx Power values. Compare the RxPow value of the wave module to the values shown in the following output example. They should be very similar if you connected the systems as we did for our example in Figure 6-8. If not, either a fiber cable that you installed when you connected a line port of the DAT100-8 was not seated correctly or the fiber is not single-mode.

Note: Recommended RxPow power levels depend on the line transceiver (i.e., DWDM) type. For specifics, refer to Recommended Transceiver Sensitivity Levels or issue the command `show modules wave 0 media-side`.

The following output is from a DAT100-8 system.

```
DAT100# show modules summary

 Interface   Admin  Line    Rate       RxPow     Ch     Status    Last Line Chg
------------ ----- ------- -------- ----------- ------- --------  -------------
Client 0     Up    Down    10Gb/s     -35.2 dBm N/A     Alarm     00d 00:59:06*
Client 1     Up    Down    10Gb/s     -40.0 dBm N/A     Alarm     00d 00:59:06*
Client 2     Up    Up      10Gb/s      -5.8 dBm N/A     OK        00d 00:59:06*
Client 3     Up    Down    10Gb/s     -34.0 dBm N/A     Alarm     00d 00:59:06*
Client 4     Up    Up      10Gb/s      -3.6 dBm N/A     OK        00d 00:59:06*
Client 5     Up    Up      10Gb/s      -2.5 dBm N/A     OK        00d 00:59:06*
Client 6     Up    Down    10Gb/s     -40.0 dBm 29.0    Alarm     00d 00:59:06*
Client 7     Up    Up      10Gb/s      -2.5 dBm N/A     OK        00d 00:59:06*
Wave 0
 Lane 0      Up    Up      100Gb/s      1.9 dBm N/A     OK        00d 00:59:06*

* No state change since DXMOS started.

DAT100#
```

#### 6.3.3.4 Confirm Client Transceivers

Some DarkStar models do not ship with the client transceivers installed in the system. Install the transceivers if necessary.

#### 6.3.3.5 Determine Transceiver Type

To determine the line transceiver (i.e., DWDM) type on the system, use the `show modules` command. Wave 0 is shown in this example.

```
DAT100# show modules wave 0

Wave 0    Up
 Description: .... N/A
 Tx: ............. OK                        Rx: .......... OK
 State Changed: .. 00d 01:03:19*             Channel: ..... N/A
 Tx Laser: ....... Enabled                   Frequency: ... 228849 GHz
 Tx Power: ....... 2.1 dBm                   Wavelength: .. 1310.00 nm
 Rx Power: ....... 1.9 dBm                   Module Type: . QSFP28
 Loopback: ....... Not Supported             Temperature: . 26 C
 Encapsulation: .. 1xCAUI-4                  Vendor: ...... INNOLIGHT
 Last Cleared: ... 00d 01:02:39              Part No.: .... TR-ZC13L-N00
 Link Downtime: .. 00d 00:00:00              Serial No.: .. IDOBBA940010
 Maximum Reach: .. Unknown                   MFG Date: .... 24071201

* No state change since DXMOS started.

DAT100#
```

#### 6.3.3.6 Configuring Optical Transport Service for DAT100-8

DAT100-8 models are delivered to customers equipped with SFP+ client modules. See the models that were purchased to confirm the transceiver type installed.

DXMOS running on DAT100-8 models have client-to-wave connections already in place. The aggregation of client circuits is pre-configured at the factory. There is nothing for the customer to do except to cable the client transceiver to the switch or router equipment. Note that client 0 of the DAT100-8 at location 1 is pre-configured to connect to client 0 of the DAT100-8 at location 2. Similarly, client 1 at location 1 is connected to client 1 at location 2. The customer does not have to configure the DAT100-8 for these connections, they are already setup.

#### 6.3.3.7 Intermediate switch VLAN tagging

DAT100-8 systems utilize QinQ double VLAN tagging (IEEE 802.1AD) to correctly pass traffic between systems. If a pair of DAT100-8 systems are connected through intermediate switches, those switches need to be configured to forward the tags coming from the DAT100-8 systems.

Each switch vendor has a different way of configuring VLAN tag forwarding, this information can typically be found under the vendor's VLAN configuration documentation..

### 6.3.3.8 Loss-of-Lock Forwarding

Loss-of-Lock Forwarding is supported between two DAT100-8 systems. In order for a loss-of-lock event to be forwarded, traffic must pass through at least one remote and local DAT100 client interface. When LOL/LOS is encountered by a client on a remote DAT100 system, the change in link status is forwarded to the receiving client on the local DAT100 system. DXMOS will issue console warning messages and log events when LOL/LOS occurs on a client. If there is only one client connection passing traffic and one of the remote or local clients goes down, the loss-of-lock event will not be forwarded since traffic is no longer being passed through the system. This feature is enabled by default and can be disabled by using the `lol-forward` command. See the Command Reference for more details.

An example of a loss-of-lock forwarding event is provided below. `show datapath` is used to verify that traffic is being passed through the remote and local system. In this example, 2 separate clients are passing traffic between the remote and local system.

```
Remote_DAT100-8# show datapath

 Mod  Description          Class  Status   | TxTotal  TxUtil%  RxTotal  RxUtil%
 ---  -------------------  -----  -------- | -------  -------  -------  -------
 C0   Seattle 0              N/A  OK       | 7.90e09    100.0  7.90e09    100.0
 C1                          N/A  OK       |       0      0.0        0      0.0
 C2                          N/A  Warning  |       0      0.0        0      0.0
 C3                          N/A  OK       |       0      0.0        0      0.0
 C4                          N/A  OK       |       0      0.0        0      0.0
 C5                          N/A  OK       |       0      0.0        0      0.0
 C6   Seattle 6              N/A  OK       | 7.90e09    100.0  7.90e09    100.0
 C7                          N/A  OK       |       0      0.0        0      0.0
 W0                          N/A  OK       | 15.8e09     20.2  15.8e09     20.2
Remote_DAT100-8#

Local_DAT100-8# show datapath

 Mod  Description          Class  Status   | TxTotal  TxUtil%  RxTotal  RxUtil%
 ---  -------------------  -----  -------- | -------  -------  -------  -------
 C0   Kirkland 0             N/A  OK       | 7.97e09    100.0  7.97e09    100.0
 C1                          N/A  OK       |       0      0.0        0      0.0
 C2                          N/A  Alarm    |       0      0.0        0      0.0
 C3                          N/A  OK       |       0      0.0        0      0.0
 C4                          N/A  OK       |       0      0.0        0      0.0
 C5                          N/A  OK       |       0      0.0        0      0.0
 C6   Kirkland 6             N/A  OK       | 7.97e09    100.0  7.98e09    100.0
 C7                          N/A  OK       |       0      0.0        0      0.0
 W0                          N/A  OK       | 15.9e09     20.2  15.9e09     20.2
```

```
Local_DAT100-8#
```

If Client 0 goes down on the remote DAT100, the local DAT100 is notified of the remote client link state change with console warning messages.

```
Remote_DAT100-8# Module Client 0 line down: RxLOS
Client 0: Rx Low alarm received. Rx power is now -35.2 dBm, threshold is -20.0 dBm.
Remote Client Down: Client 0 laser is down

Local_DAT100-8# Remote Client Down: Client 0 laser is down
Module Client 0 line down: TxDisable RxLOS
Client 0: Rx Low alarm received. Rx power is now -26.8 dBm, threshold is -20.0 dBm.
```

Issuing `show datapath` for either system displays the utilization of client 0 at 0.0%.

```
Remote_DAT100-8# show datapath

 Mod  Description          Class  Status   | TxTotal  TxUtil%  RxTotal  RxUtil%
 ---  -------------------  -----  -------- | -------  -------  -------  -------
 C0   Seattle 0              N/A  Alarm    | 24.0e09      0.0  24.1e09      0.0
 C1                          N/A  OK       |       0      0.0        0      0.0
 C2                          N/A  Warning  |       0      0.0        0      0.0
 C3                          N/A  OK       |       0      0.0        0      0.0
 C4                          N/A  OK       |       0      0.0        0      0.0
 C5                          N/A  OK       |       0      0.0        0      0.0
 C6   Seattle 6              N/A  OK       | 24.7e09    100.0  24.7e09    100.0
 C7                          N/A  OK       |       0      0.0        0      0.0
 W0                          N/A  OK       | 48.8e09     10.1  48.8e09     10.1
Remote_DAT100-8#

Local_DAT100-8# show datapath

 Mod  Description          Class  Status   | TxTotal  TxUtil%  RxTotal  RxUtil%
 ---  -------------------  -----  -------- | -------  -------  -------  -------
 C0   Kirkland 0             N/A  Alarm    | 24.1e09      0.0  24.1e09      0.0
 C1                          N/A  OK       |       0      0.0        0      0.0
 C2                          N/A  Alarm    |       0      0.0        0      0.0
 C3                          N/A  OK       |       0      0.0        0      0.0
 C4                          N/A  OK       |       0      0.0        0      0.0
 C5                          N/A  OK       |       0      0.0        0      0.0
 C6   Kirkland 6             N/A  OK       | 24.8e09    100.0  24.8e09    100.0
 C7                          N/A  OK       |       0      0.0        0      0.0
 W0                          N/A  OK       | 49.0e09     10.1  49.0e09     10.1
Local_DAT100-8#
```

## 6.3.4 DQT400-4

This section uses the DarkStar DQT400-4 (channel) transponder and the DMD-A with Line Protection as an example.

### 6.3.4.1 Connect the Transponders with the DMD-A Systems

Figure 6-11 illustrates the connection of two DQT400-4 transponders and their associated DMD systems, which in this example are the DMD-A (mux/demux with amplifier) models. Note that because this DMD-A also has Line Protection, it will use two line ports rather than just one.

**FIGURE 6-11. Connected Pair of DQT400-4 Transponder and DMD-A Systems**

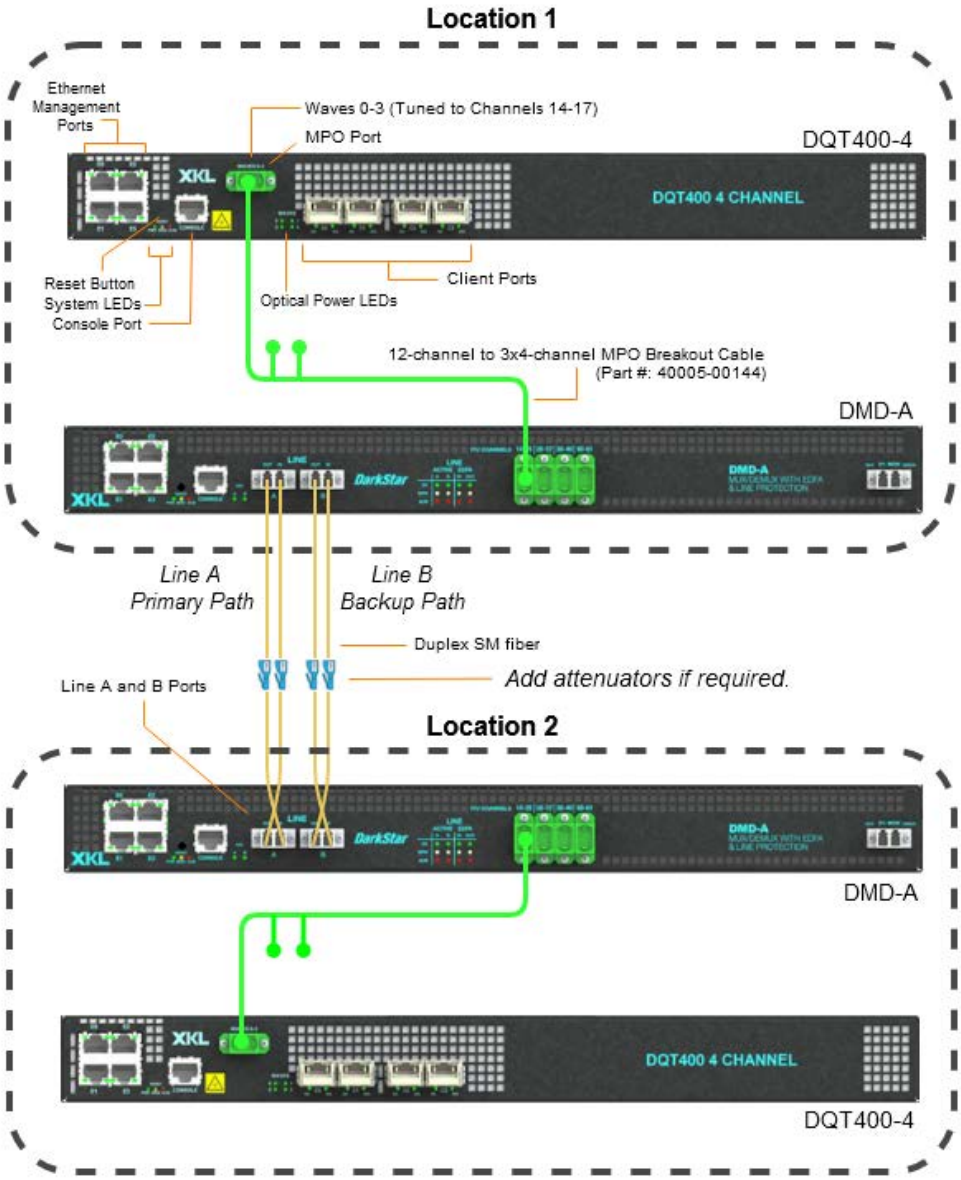

**Connection steps:**

1. Insert external attenuators, if required, into the DMD-A line ports. In this example, we use an attenuator value of 10dB to ensure that the line transceivers (i.e., DWDM) do not exceed the maximum receive power (RxPow). Confirm by referring to Recommended Transceiver Sensitivity Levels.
2. Connect the two DMD-A systems via their line ports as follows: Line A of one DMD-A to Line A of the other, then Line B to Line B. For details, see Mux/Demux with Amplifier System (DMD-A).
3. Using the `show modules OSC` command, verify the OSC transceiver Rx power in both DMD-A systems. The OSC transceiver should not be in a Loss of Signal (LOS) state, confirming that the Line A and Line B fiber connections were done correctly. Note that there are 4 OSC transceivers to check, two in each DMD-A.
4. Connect each transponder to a DMD-A with MPO breakout cable (shown as green in the example).
5. Set the wavelength of the tunable transceivers in all transponder systems.
6. Configure the amplifiers in the DMD-A systems using the `control automatic channel-count` command.
7. Enable all EDFAs in the DMD-A.

**Notes:**

- Depending on the customer equipment being attached, client transceivers may also require attenuators. Refer to Recommended Transceiver Sensitivity Levels for DarkStar equipment, and pertinent equipment documentation for the customer equipment.
- The rest of the section assumes that the equipment has been deployed in the field. However, if you are setting up the systems in a lab prior to deployment, the following process is the same.

### 6.3.4.2 Tune Line Transceivers

For DarkStar transponder systems, you must tune all line transceivers (i.e., DWDM) the very first time that the system starts and then save this information to the system configuration file with the `write memory` command. Otherwise, these tunable transceivers will be left untuned, as there are no default wavelength settings.

The `tune-for-dmd` command allows you to match a group of selected channels of the DMD-A with the waves of the transponder. For example, consider the DQT400-4 and DMD-A connection shown in Figure 6-11. Here, the green MPO cable connects the line transceivers ("Waves 0-3") of DQT400-4 with the "Channels 14-17" of the DMD-A. The corresponding command on the DQT400-4 system at Location 1 (for 100GHz spacing per Figure 6-11) is as follows:

```
DQT400-4_Location1 CONF# tune-for-dmd wave 00-03 spacing 100GHz channel-group 14-17
```

In the configuration file, this `tune-for-dmd` command results in 4 separate tune commands. Also, issue the same command on DQT400-4_Location2.

### 6.3.4.3 Verify the DMD-A Line Port Link

To verify the line port link, issue the `show modules summary` command to confirm that the receive power (RxPow) for all line (wave) transceivers falls within an acceptable range. Alternatively, issue the command `show modules wave 0 media-side` and note the manufacturer's min/max Rx Power values. Compare the RxPow values of each wave interface to the values shown in the following output example. They should be very similar if you used an attenuator with a 10dB value, as we did for our example in Figure 6-11. If not, either a fiber cable that you installed when you connected a line-side port of the DMD-A was not seated correctly, the fiber was not single-mode, or an MPO cable was not properly seated.

If the DMD-A has the Line Protection feature, as shown in the example in Figure 6-11, then the last step to setting up your system is to enable the Line Protection feature. This is accomplished by issuing the `protection enable` command. Follow this with the `show protection` command to confirm the state of the Line Protection.

**Note:** Recommended RxPow power levels depend on the line transceiver (i.e., DWDM) type. For specifics, refer to Recommended Transceiver Sensitivity Levels or issue the command `show modules wave 0 media-side`. If your DarkStar muxponder has been configured with one or more EDFAs, see the section Optional EDFA.

> **Caution:** Excessive input power can cause link performance degradation or component damage.

The following output is from a DQT400-4 system.

```
DQT400-4_Location1# show modules summary
 Interface   Admin  Line    Rate       RxPow     Ch  Transceiver  Last Line Chg
------------ ----- ------- -------- ----------- ---- -----------  -------------
Client 0
 Lane 0      Up    Up      100Gb/s     -3.9 dBm N/A  OK           00d 22:42:45
 Lane 1      Up    Up      100Gb/s     -3.5 dBm N/A  OK           00d 22:42:45
 Lane 2      Up    Up      100Gb/s     -3.3 dBm N/A  OK           00d 22:42:45
 Lane 3      Up    Up      100Gb/s     -2.7 dBm N/A  OK           00d 22:42:45
Client 1
 Lane 0      Up    Up      100Gb/s     -3.2 dBm N/A  OK           00d 22:44:42
 Lane 1      Up    Up      100Gb/s     -2.8 dBm N/A  OK           00d 22:44:42
 Lane 2      Up    Up      100Gb/s     -3.4 dBm N/A  OK           00d 22:44:42
 Lane 3      Up    Up      100Gb/s     -3.1 dBm N/A  OK           00d 22:44:42
Client 2
 Lane 0      Up    Up      100Gb/s     -3.8 dBm N/A  OK           00d 22:44:42
 Lane 1      Up    Up      100Gb/s     -3.5 dBm N/A  OK           00d 22:44:42
 Lane 2      Up    Up      100Gb/s     -2.9 dBm N/A  OK           00d 22:44:42
 Lane 3      Up    Up      100Gb/s     -3.0 dBm N/A  OK           00d 22:44:42
Client 3
 Lane 0      Up    Up      100Gb/s     -3.3 dBm N/A  OK           00d 22:44:42
 Lane 1      Up    Up      100Gb/s     -3.7 dBm N/A  OK           00d 22:44:42
 Lane 2      Up    Up      100Gb/s     -3.1 dBm N/A  OK           00d 22:44:42
 Lane 3      Up    Up      100Gb/s     -3.3 dBm N/A  OK           00d 22:44:42
Wave 0
 Lane 0      Up    Up      400Gb/s     -5.6 dBm 14.0 OK           00d 22:42:52
Wave 1
 Lane 0      Up    Up      400Gb/s     -5.1 dBm 15.0 OK           00d 22:42:52
Wave 2
 Lane 0      Up    Up      400Gb/s     -5.3 dBm 16.0 OK           00d 22:42:52
Wave 3
 Lane 0      Up    Up      400Gb/s     -5.5 dBm 17.0 OK           00d 22:42:52

> means the line state has not changed since DXMOS was restarted.
```

#### 6.3.4.4 Confirm Client Transceivers

Some DarkStar models do not ship with the client transceivers installed in the system. Install the transceivers if necessary.



**In a single step for each optical connector, clean the fiber and insert it into the transceiver or adapter. DO NOT clean both ends of the fiber cable at the same time. Rather, clean and insert one end of the fiber cable, then clean and insert the other end.**

#### 6.3.4.5 Determine Transceiver Type

To determine the line transceiver (i.e., DWDM) type on the system, use the `show modules` command. Wave 0 is shown in this example.

```
DQT400-4_Location1# show modules wave 0

Wave 0    Up
  Description: .... Seattle_to_Redmond
  Tx: ............. OK                          Rx: .......... LOL
  State Changed: .. 00d 22:46:45                Channel: ..... 14.0
  Tx Laser: ....... Enabled                     Frequency: ... 191400 GHz
  Tx Power: ....... -4.5 dBm                    Wavelength: .. 1566.31 nm
  Rx Power: ....... -5.6 dBm                    Module Type: . Tunable OSFP
  Loopback: ....... Off                         Temperature: . 57 C
  Encapsulation: .. 1xCAUI-4                    Vendor: ...... Acacia Comm Inc.
  Last Cleared: ... unknown                     Part No.: .... DP04SFP8-E30-001
  Link Downtime: .. 00d 22:48:37                Serial No.: .. 212855624
  Maximum Reach: .. Unknown                     MFG Date: .... 210725
```

#### 6.3.4.6 Configuring Optical Transport Service for DQT400

DQT400 models are delivered equipped with QSFP28 or QSFP-DD client modules. See the models that were purchased to confirm the transceiver type installed.

DXMOS running on DQT400 models have client-to-wave connections already in place. Client module 0 is dedicated to wave module 0, for example. The only setting that needs to be configured is the desired encapsulation. The available encapsulations are determined by the type of client module installed. To see the available encapsulation options, type the `encapsulation` command.

Once your equipment has been connected to client/lane ports using jumper fibers, the DarkStar system must be provisioned for transport service using the following procedure:

1. Enter enable mode and then type `configure` to enter configure mode.
2. Select a client to define the encapsulation; for example, `module client 0`.
3. Type `encapsulation` followed by <Tab> (or "?") to list the available encapsulation types. Select the desired type.
4. Connect to the remote DarkStar system on the other end of the fiber line and, using the same process, select the same encapsulation.
5. Save the updated configuration with a `write memory` for each system.

**Note:** There is a default encapsulation type if one is not specified by the user. Two DarkStar systems will not pass data if there is a mismatch in encapsulation types between the two systems. Make sure both systems have been configured similarly using the same encapsulation type.

#### 6.3.4.7 Loss-of-Lock Forwarding

Loss-of-Lock Forwarding is supported between two DQT400 systems. In order for a loss-of-lock event to be forwarded, a local and remote DQT400 wave must be able to pass traffic to each other. When LOL is encountered by a remote client on a remote DQT400 system, the change in LOL status is forwarded to the receiving client on the local DQT400 system. DXMOS will issue console warning messages and log events when a LOL message is received. This feature is enabled by default and can be disabled by using the `lol-forward` command. See the Command Reference for more details.

In the event that the local and remote clients are both loop backed and indicate the remote end has gone down, both ends will have to be manually brought back up.

### 6.3.5 DQT400-12

This section uses the DarkStar DQT400-12 (channel) transponder and the DMD-A with Line Protection as an example.

#### 6.3.5.1 Connect the Transponders with the DMD-A Systems

Figure 6-12 illustrates the connection of two DQT400-12 transponders and their associated DMD systems, which in this example are the DMD-A (mux/demux with amplifier) models. Note that because this DMD-A also has Line Protection, it will use two line ports rather than just one.

**FIGURE 6-12. Connected Pair of DQT400-12 Transponder and DMD-A With Line Protection**

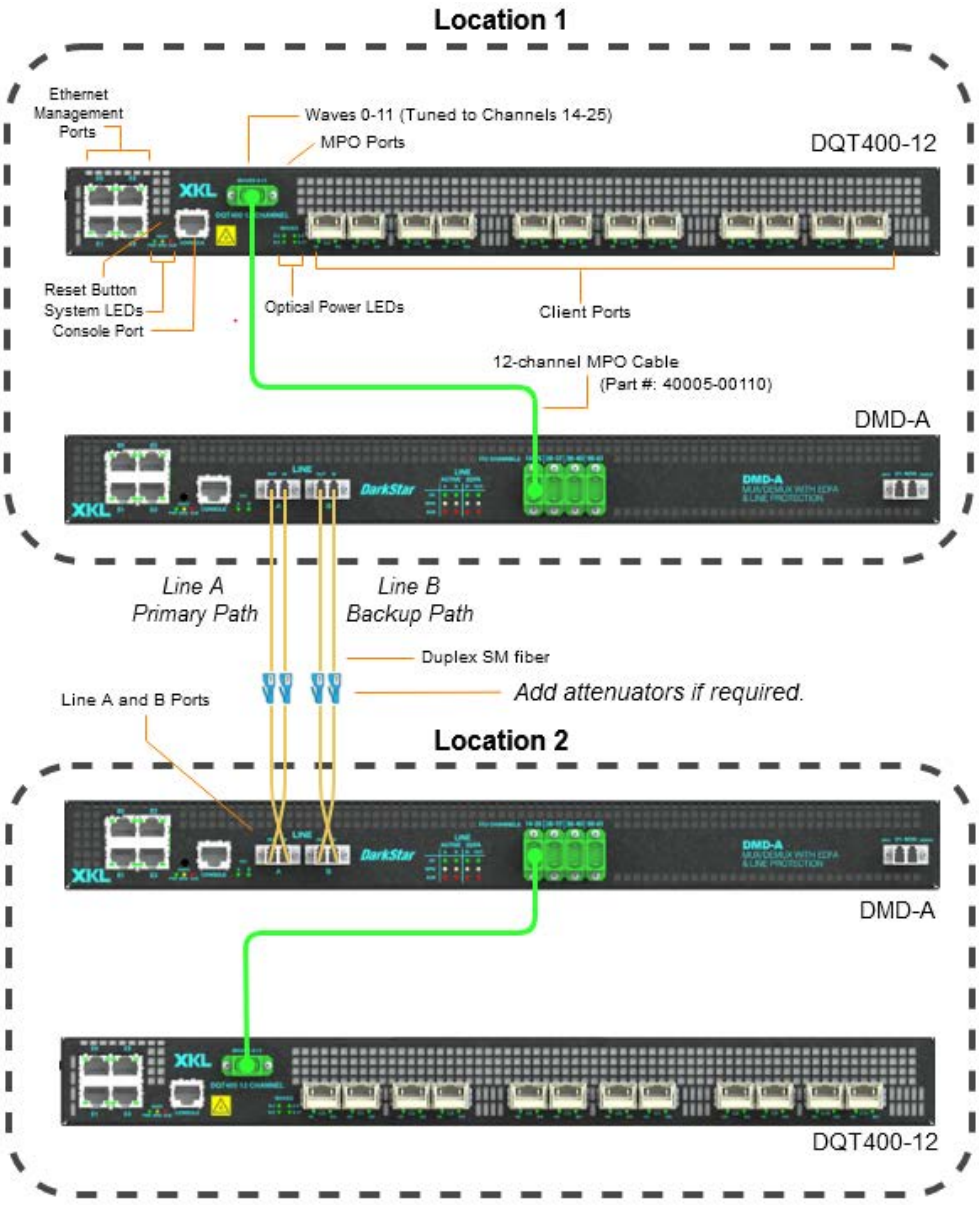

**Connection steps:**

1. Insert external attenuators, if required, into the DMD-A line ports. In this example, we use an attenuator value of 10dB to ensure that the line transceivers (i.e., DWDM) do not exceed the maximum receive power (RxPow). Confirm by referring to Recommended Transceiver Sensitivity Levels.
2. Connect the two DMD-A systems via their line ports as follows: Line A of one DMD-A to Line A of the other, then Line B to Line B. For details, see Mux/Demux with Amplifier System (DMD-A).
3. Using the `show modules OSC` command, verify the OSC transceiver Rx power in both DMD-A systems. The OSC transceiver should not be in a Loss of Signal (LOS) state, confirming that the Line A and Line B fiber connections were done correctly. Note that there are 4 OSC transceivers to check, two in each DMD-A.
4. Connect each transponder to a DMD-A with MPO breakout cable (shown as green in the example).
5. Set the wavelength of the tunable transceivers in all transponder systems.
6. Configure the amplifiers in the DMD-A systems using the `control automatic channel-count` command.
7. Enable all EDFAs in the DMD-A.

**Notes:**

- Depending on the customer equipment being attached, client transceivers may also require attenuators. Refer to Recommended Transceiver Sensitivity Levels for DarkStar equipment, and pertinent equipment documentation for the customer equipment.
- The rest of the section assumes that the equipment has been deployed in the field. However, if you are setting up the systems in a lab prior to deployment, the following process is the same.

### 6.3.5.2 Tune Line Transceivers

For DarkStar transponder systems, you must tune all line transceivers (i.e., DWDM) the very first time that the system starts and then save this information to the system configuration file with the `write memory` command. Otherwise, these tunable transceivers will be left untuned, as there are no default wavelength settings.

The `tune-for-dmd` command allows you to match a group of selected channels of the DMD-A with the waves of the transponder. For example, consider the DQT400-12 and DMD-A connection shown in Figure 6-12. Here, the green MPO cable connects the line transceivers ("Waves 0-11") of DQT400-12 with the "Channels 14-25" of the DMD-A. The corresponding command on the DQT400-12 system at Location 1 (for 100GHz spacing per Figure 6-12) is as follows:

```
DQT400-12_Location1 CONF# tune-for-dmd wave 00-11 spacing 100GHz channel-group 14-25
```

In the configuration file, this `tune-for-dmd` command results in 4 separate tune commands. Also, issue the same command on DQT400-12_Location2.

### 6.3.5.3 Verify the DMD-A Line Port Link

To verify the line port link, issue the `show modules summary` command to confirm that the receive power (RxPow) for all line (wave) transceivers falls within an acceptable range. Alternatively, issue the command `show modules wave 0 media-side` and note the manufacturer's min/max Rx Power values. Compare the RxPow values of each wave interface to the values shown in the following output example. They should be very similar if you used an attenuator with a 10dB value, as we did for our example in Figure 6-12. If not, either a fiber cable that you installed when you connected a line-side port of the DMD-A was not seated correctly, the fiber was not single-mode, or an MPO cable was not properly seated.

If the DMD-A has the Line Protection feature, as shown in the example in Figure 6-12, then the last step to setting up your system is to enable the Line Protection feature. This is accomplished by issuing the `protection enable` command. Follow this with the `show protection` command to confirm the state of the Line Protection.

**Note:** Recommended RxPow power levels depend on the line transceiver (i.e., DWDM) type. For specifics, refer to Recommended Transceiver Sensitivity Levels or issue the command `show modules wave 0 media-side`. If your DarkStar muxponder has been configured with one or more EDFAs, see the section Optional EDFA.

> **Caution:** Excessive input power can cause link performance degradation or component damage.

The following output is from a DQT400-12 system.

```
DQT400-12_Location1# show modules summary
 Interface   Admin  Line     Rate       RxPow     Ch  Transceiver  Last Line Chg
------------ ----- -------- -------- ----------- ---- -----------  -------------
Client 0
 Lane 0      Up    Up       100Gb/s    -3.6 dBm N/A  OK           00d 22:42:45
 Lane 1      Up    Up       100Gb/s    -3.3 dBm N/A  OK           00d 22:42:45
 Lane 2      Up    Up       100Gb/s    -3.1 dBm N/A  OK           00d 22:42:45
 Lane 3      Up    Up       100Gb/s    -3.5 dBm N/A  OK           00d 22:42:45
Client 1
 Lane 0      Up    Up       100Gb/s    -3.0 dBm N/A  OK           00d 22:44:42
 Lane 1      Up    Up       100Gb/s    -3.9 dBm N/A  OK           00d 22:44:42
 Lane 2      Up    Up       100Gb/s    -3.7 dBm N/A  OK           00d 22:44:42
 Lane 3      Up    Up       100Gb/s    -3.2 dBm N/A  OK           00d 22:44:42
Client 2
 Lane 0      Up    Up       100Gb/s    -2.8 dBm N/A  OK           00d 22:44:42
 Lane 1      Up    Up       100Gb/s    -3.0 dBm N/A  OK           00d 22:44:42
 Lane 2      Up    Up       100Gb/s    -3.8 dBm N/A  OK           00d 22:44:42
 Lane 3      Up    Up       100Gb/s    -3.1 dBm N/A  OK           00d 22:44:42
Client 3
 Lane 0      Up    Up       100Gb/s    -3.3 dBm N/A  OK           00d 22:44:42
 Lane 1      Up    Up       100Gb/s    -3.5 dBm N/A  OK           00d 22:44:42
 Lane 2      Up    Up       100Gb/s    -3.4 dBm N/A  OK           00d 22:44:42
 Lane 3      Up    Up       100Gb/s    -3.7 dBm N/A  OK           00d 22:44:42
Client 4
 Lane 0      Up    Up       100Gb/s    -3.5 dBm N/A  OK           00d 22:44:42
 Lane 1      Up    Up       100Gb/s    -3.8 dBm N/A  OK           00d 22:44:42
 Lane 2      Up    Up       100Gb/s    -3.2 dBm N/A  OK           00d 22:44:42
 Lane 3      Up    Up       100Gb/s    -3.0 dBm N/A  OK           00d 22:44:42
Client 5
 Lane 0      Up    Up       100Gb/s    -3.1 dBm N/A  OK           00d 22:44:42
 Lane 1      Up    Up       100Gb/s    -2.9 dBm N/A  OK           00d 22:44:42
 Lane 2      Up    Up       100Gb/s    -3.6 dBm N/A  OK           00d 22:44:42
 Lane 3      Up    Up       100Gb/s    -2.8 dBm N/A  OK           00d 22:44:42
Client 6
 Lane 0      Up    Up       100Gb/s    -3.3 dBm N/A  OK           00d 22:44:42
```

```
 Lane 1      Up    Up       100Gb/s     -3.7 dBm N/A  OK          00d 22:44:42
 Lane 2      Up    Up       100Gb/s     -3.2 dBm N/A  OK          00d 22:44:42
 Lane 3      Up    Up       100Gb/s     -3.1 dBm N/A  OK          00d 22:44:42
Client 7
 Lane 0      Up    Up       100Gb/s     -2.9 dBm N/A  OK          00d 22:44:42
 Lane 1      Up    Up       100Gb/s     -3.8 dBm N/A  OK          00d 22:44:42
 Lane 2      Up    Up       100Gb/s     -3.0 dBm N/A  OK          00d 22:44:42
 Lane 3      Up    Up       100Gb/s     -3.5 dBm N/A  OK          00d 22:44:42
Client 8
 Lane 0      Up    Up       100Gb/s     -3.9 dBm N/A  OK          00d 22:44:42
 Lane 1      Up    Up       100Gb/s     -3.1 dBm N/A  OK          00d 22:44:42
 Lane 2      Up    Up       100Gb/s     -3.3 dBm N/A  OK          00d 22:44:42
 Lane 3      Up    Up       100Gb/s     -2.7 dBm N/A  OK          00d 22:44:42
Client 9
 Lane 0      Up    Up       100Gb/s     -3.0 dBm N/A  OK          00d 22:44:42
 Lane 1      Up    Up       100Gb/s     -3.6 dBm N/A  OK          00d 22:44:42
 Lane 2      Up    Up       100Gb/s     -3.6 dBm N/A  OK          00d 22:44:42
 Lane 3      Up    Up       100Gb/s     -3.5 dBm N/A  OK          00d 22:44:42
Client 10
 Lane 0      Up    Up       100Gb/s     -3.8 dBm N/A  OK          00d 22:44:42
 Lane 1      Up    Up       100Gb/s     -3.2 dBm N/A  OK          00d 22:44:42
 Lane 2      Up    Up       100Gb/s     -3.7 dBm N/A  OK          00d 22:44:42
 Lane 3      Up    Up       100Gb/s     -3.1 dBm N/A  OK          00d 22:44:42
Client 11
 Lane 0      Up    Up       100Gb/s     -3.4 dBm N/A  OK          00d 22:44:42
 Lane 1      Up    Up       100Gb/s     -3.3 dBm N/A  OK          00d 22:44:42
 Lane 2      Up    Up       100Gb/s     -2.9 dBm N/A  OK          00d 22:44:42
 Lane 3      Up    Up       100Gb/s     -3.0 dBm N/A  OK          00d 22:44:42
Wave 0
 Lane 0      Up    Up       400Gb/s     -5.3 dBm 26.0 OK          00d 22:42:52
Wave 1
 Lane 0      Up    Up       400Gb/s     -5.5 dBm 27.0 OK          00d 22:42:52
Wave 2
 Lane 0      Up    Up       400Gb/s     -5.7 dBm 28.0 OK          00d 22:42:52
Wave 3
 Lane 0      Up    Up       400Gb/s     -5.9 dBm 29.0 OK          00d 22:42:52
Wave 4
 Lane 0      Up    Up       400Gb/s     -5.8 dBm 30.0 OK          00d 22:42:52
Wave 5
 Lane 0      Up    Up       400Gb/s     -5.6 dBm 31.0 OK          00d 22:42:52
Wave 6
 Lane 0      Up    Up       400Gb/s     -5.3 dBm 32.0 OK          00d 22:42:52
Wave 7
 Lane 0      Up    Up       400Gb/s     -5.0 dBm 33.0 OK          00d 22:42:52
Wave 8
 Lane 0      Up    Up       400Gb/s     -5.1 dBm 34.0 OK          00d 22:42:52
Wave 9
 Lane 0      Up    Up       400Gb/s     -5.4 dBm 35.0 OK          00d 22:42:52
Wave 10
 Lane 0      Up    Up       400Gb/s     -5.9 dBm 36.0 OK          00d 22:42:52
Wave 11
 Lane 0      Up    Up       400Gb/s     -5.2 dBm 37.0 OK          00d 22:42:52

> means the line state has not changed since DXMOS was restarted.
```

#### 6.3.5.4 Confirm Client Transceivers

Some DarkStar models do not ship with the client transceivers installed in the system. Install the transceivers if necessary.



**In a single step for each optical connector, clean the fiber and insert it into the transceiver or adapter. DO NOT clean both ends of the fiber cable at the same time. Rather, clean and insert one end of the fiber cable, then clean and insert the other end.**

#### 6.3.5.5 Determine Transceiver Type

To determine the line transceiver (i.e., DWDM) type on the system, use the `show modules` command. Wave 0 is shown in this example.

```
DQT400-12_Location1# show modules wave 0

Wave 0    Up
  Description: .... Seattle_to_Redmond
  Tx: ............. OK                          Rx: .......... LOL
  State Changed: .. 00d 22:46:45                Channel: ..... 14.0
  Tx Laser: ....... Enabled                     Frequency: ... 191400 GHz
  Tx Power: ....... -5.3 dBm                    Wavelength: .. 1566.31 nm
  Rx Power: ....... -5.6 dBm                    Module Type: . Tunable OSFP
  Loopback: ....... Off                         Temperature: . 57 C
  Encapsulation: .. 1xCAUI-4                    Vendor: ...... Acacia Comm Inc.
  Last Cleared: ... unknown                     Part No.: .... DP04SFP8-E30-001
  Link Downtime: .. 00d 22:48:37                Serial No.: .. 212855624
  Maximum Reach: .. Unknown                     MFG Date: .... 210725
```

#### 6.3.5.6 Configuring Optical Transport Service for DQT400-12

DQT400-12 models are delivered equipped with QSFP28 or QSFP-DD client modules. See the models that were purchased to confirm the transceiver type installed.

DXMOS running on DQT400-12 models have client-to-wave connections already in place. Client module 0 is dedicated to wave module 0, for example. The only setting that needs to be configured is the desired encapsulation. The available encapsulations are determined by the type of client module installed. To see the available encapsulation options, type the `encapsulation` command.

Once your equipment has been connected to client/lane ports using jumper fibers, the DarkStar system must be provisioned for transport service using the following procedure:

1. Enter enable mode and then type `configure` to enter configure mode.
2. Select a client to define the encapsulation; for example, `module client 0`.
3. Type `encapsulation` followed by <Tab> (or "?") to list the available encapsulation types. Select the desired type.
4. Connect to the remote DarkStar system on the other end of the fiber line and, using the same process, select the same encapsulation.
5. Save the updated configuration with a `write memory` for each system.

**Note:** There is a default encapsulation type if one is not specified by the user. Two DarkStar systems will not pass data if there is a mismatch in encapsulation types between the two systems. Make sure both systems have been configured similarly, using the same encapsulation type.

#### 6.3.5.7 Loss-of-Lock Forwarding

Loss-of-Lock Forwarding is supported between two DQT400 systems. In order for a loss-of-lock event to be forwarded, a local and remote DQT400 wave must be able to pass traffic to each other. When LOL is encountered by a remote client on a remote DQT400 system, the change in LOL status is forwarded to the receiving client on the local DQT400 system. DXMOS will issue console warning messages and log events when a LOL message is received. This feature is enabled by default and can be disabled by using the `lol-forward` command. See the Command Reference for more details.

In the event that the local and remote clients are both loop backed and indicate the remote end has gone down, both ends will have to be manually brought back up.

### 6.3.6 DFX400-12

This section uses the DarkStar DFX400-12 transponder and the SpectraPath Illuminator as an example.

#### 6.3.6.1 Connect the Transponders with the SpectraPath Illuminator Systems

Figure 6-13 illustrates the connection of two DFX400-12 transponders and their associated Illuminator systems.

**FIGURE 6-13. Connected Pair of DFX400-12 Transponder and Illuminator Systems**

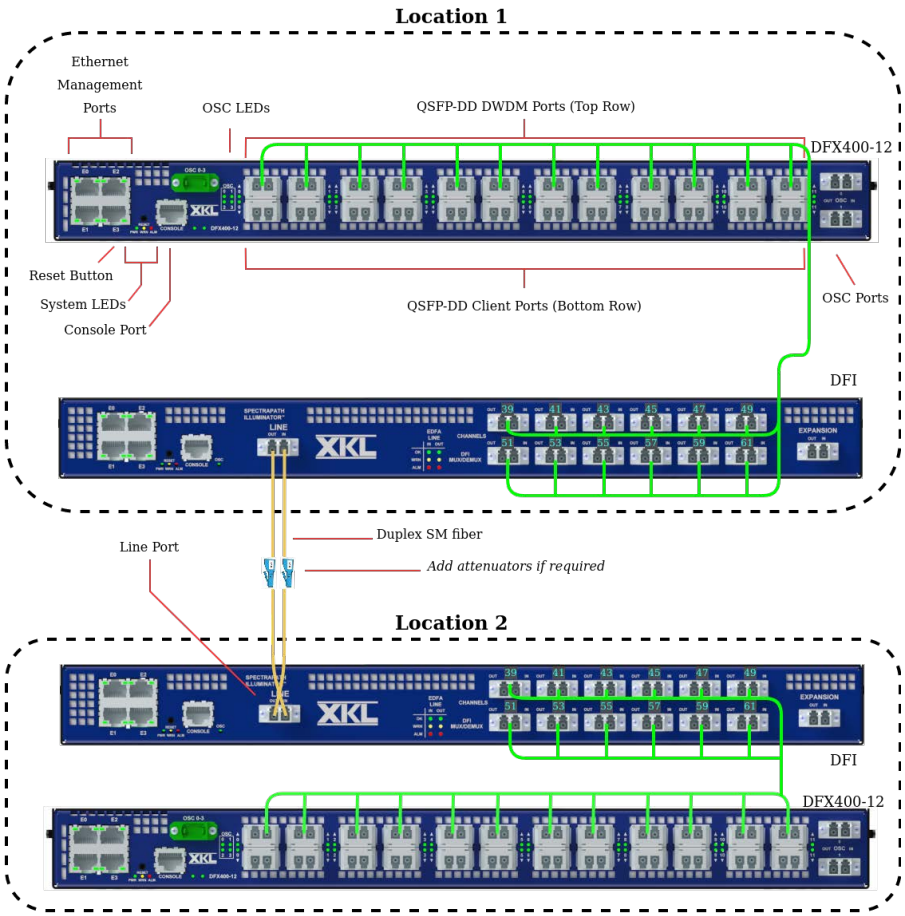

**Connection steps:**

1. Insert external attenuators, if required, into the Illuminator line port. In this example, we use an attenuator value of 10dB to ensure that the line transceivers (i.e., DWDM) do not exceed the maximum receive power (RxPow). Confirm by referring to Recommended Transceiver Sensitivity Levels.
2. Connect two Illuminator systems via their line port. For details, see SpectraPath.
3. Using the `show modules OSC` command, verify the OSC transceiver Rx power for both Illuminator systems. The OSC transceiver should not be in a Loss of Signal (LOS) state, confirming that the line fiber connections were done correctly. Note that there are 2 OSC transceivers to check, one in each Illuminator.
4. Connect each transponder to an Illuminator with SM fiber cables (shown as green in the example).
5. Set the wavelength of the tunable transceivers in all transponder systems.
6. Configure the amplifiers in the Illuminator systems using the `control automatic channel-count` command.
7. Enable all EDFAs in the Illuminator.
8. Enable optical channel monitoring on each Illuminator for each channel. See Illuminator for more details

**Notes:**

- Depending on the customer equipment being attached, client transceivers may also require attenuators. Refer to Recommended Transceiver Sensitivity Levels for DarkStar equipment, and pertinent equipment documentation for the customer equipment.
- The rest of the section assumes that the equipment has been deployed in the field. However, if you are setting up the systems in a lab prior to deployment, the following process is the same.

### 6.3.6.2 Tune Line Transceivers

For DarkStar transponder systems, you must tune all line transceivers (i.e., DWDM) the very first time that the system starts and then save this information to the system configuration file with the `write memory` command. Otherwise, these tunable transceivers will be left untuned, as there are no default wavelength settings.

The `tune-for-dmd` command allows you to match a group of selected channels of the Illuminator with the DWDM transceivers of the transponder. For example, consider the DFX400-12 and Illuminator connection shown in Figure 6-13. Here, the green SM cable connects the line transceivers ("Waves 0-11") of DFX400-12 with the "Channels 14-25" of the Illuminator. The corresponding command on the DFX400-12 system at Location 1 (for 100GHz spacing per Figure 6-13) is as follows:

```
DFX400-12_Location1 CONF# tune-for-dmd wave 00-11 spacing 100GHz channel-group 14-25
```

In the configuration file, this `tune-for-dmd` command results in 12 separate tune commands. Also, issue the same command on DFX400-12_Location2.

### 6.3.6.3 Verify the Illuminator Line Port Link

To verify the line port link, issue the `show modules summary` command to confirm that the receive power (RxPow) for all line (wave) transceivers falls within an acceptable range. Alternatively, issue the command `show modules {upper | lower} n media-side` for a DWDM line module and note the manufacturer's min/max Rx Power values. Compare the RxPow values of each DWDM line module to the values shown in the following output example. They should be very similar if you used an attenuator with a 10dB value, as we did for our example in Figure 6-13. If not, either a fiber cable that you installed when you connected a line-side port of the Illuminator was not seated correctly, the fiber was not single-mode, or an SM cable was not properly seated.

**Note:** Recommended RxPow power levels depend on the line transceiver (i.e., DWDM) type. For specifics, refer to Recommended Transceiver Sensitivity Levels or issue the `show modules wave {upper | lower} n media-side` command for a DWDM line module.

> **Caution:** Excessive input power can cause link performance degradation or component damage.

The following output is from a DFX400-12 system.

```
DFX400-12_Location1# show modules summary
 Interface   Admin  Line    Rate       RxPow     Ch     Status    Last Line Chg
------------ ----- ------- -------- ----------- ------- --------  -------------
Lower 0
 Lane 0      Up    Up      100Gb/s     -2.2 dBm N/A     OK        00d 19:05:01
 Lane 1      Up    Up      100Gb/s     -2.3 dBm N/A     OK        00d 19:05:01
 Lane 2      Up    Up      100Gb/s     -1.9 dBm N/A     OK        00d 19:05:00
 Lane 3      Up    Up      100Gb/s     -2.0 dBm N/A     OK        00d 19:05:00
Lower 1
 Lane 0      Up    Up      100Gb/s     -1.9 dBm N/A     OK        00d 19:11:30*
 Lane 1      Up    Up      100Gb/s     -2.6 dBm N/A     OK        00d 19:11:30*
 Lane 2      Up    Up      100Gb/s     -2.5 dBm N/A     OK        00d 19:11:30*
 Lane 3      Up    Up      100Gb/s     -2.3 dBm N/A     OK        00d 19:11:30*
Lower 2
 Lane 0      Up    Up      100Gb/s     -2.7 dBm N/A     OK        00d 19:11:30*
 Lane 1      Up    Up      100Gb/s     -3.2 dBm N/A     OK        00d 19:11:30*
 Lane 2      Up    Up      100Gb/s     -2.5 dBm N/A     OK        00d 19:11:30*
 Lane 3      Up    Up      100Gb/s     -2.6 dBm N/A     OK        00d 19:11:30*
Lower 3
 Lane 0      Up    Up      100Gb/s     -3.3 dBm N/A     OK        00d 19:11:30*
 Lane 1      Up    Up      100Gb/s     -2.0 dBm N/A     OK        00d 19:11:30*
 Lane 2      Up    Up      100Gb/s     -2.4 dBm N/A     OK        00d 19:11:30*
 Lane 3      Up    Up      100Gb/s     -2.1 dBm N/A     OK        00d 19:11:30*
Lower 4
 Lane 0      Up    Up      100Gb/s     -1.8 dBm N/A     OK        00d 19:11:30*
 Lane 1      Up    Up      100Gb/s     -1.9 dBm N/A     OK        00d 19:11:30*
 Lane 2      Up    Up      100Gb/s     -2.4 dBm N/A     OK        00d 19:11:30*
 Lane 3      Up    Up      100Gb/s     -2.3 dBm N/A     OK        00d 19:11:30*
Lower 5
 Lane 0      Up    Up      100Gb/s     -2.5 dBm N/A     OK        00d 19:11:30*
 Lane 1      Up    Up      100Gb/s     -2.7 dBm N/A     OK        00d 19:11:30*
 Lane 2      Up    Up      100Gb/s     -2.6 dBm N/A     OK        00d 19:11:31*
 Lane 3      Up    Up      100Gb/s     -2.8 dBm N/A     OK        00d 19:11:31*
Lower 6
 Lane 0      Up    Up      100Gb/s     -1.8 dBm N/A     OK        00d 19:11:31*
```

```
 Lane 1      Up    Up      100Gb/s     -1.7 dBm N/A     OK        00d 19:11:31*
 Lane 2      Up    Up      100Gb/s     -1.9 dBm N/A     OK        00d 19:11:31*
 Lane 3      Up    Up      100Gb/s     -2.1 dBm N/A     OK        00d 19:11:31*
Lower 7
 Lane 0      Up    Up      100Gb/s     -2.3 dBm N/A     OK        00d 19:11:31*
 Lane 1      Up    Up      100Gb/s     -2.3 dBm N/A     OK        00d 19:11:31*
 Lane 2      Up    Up      100Gb/s     -2.3 dBm N/A     OK        00d 19:11:31*
 Lane 3      Up    Up      100Gb/s     -2.4 dBm N/A     OK        00d 19:11:31*
Lower 8
 Lane 0      Up    Up      100Gb/s     -2.1 dBm N/A     OK        00d 19:11:31*
 Lane 1      Up    Up      100Gb/s     -2.2 dBm N/A     OK        00d 19:11:31*
 Lane 2      Up    Up      100Gb/s     -2.0 dBm N/A     OK        00d 19:11:31*
 Lane 3      Up    Up      100Gb/s     -2.3 dBm N/A     OK        00d 19:11:31*
Lower 9
 Lane 0      Up    Up      100Gb/s     -1.7 dBm N/A     OK        00d 19:11:31*
 Lane 1      Up    Up      100Gb/s     -1.6 dBm N/A     OK        00d 19:11:31*
 Lane 2      Up    Up      100Gb/s     -1.8 dBm N/A     OK        00d 19:11:31*
 Lane 3      Up    Up      100Gb/s     -1.9 dBm N/A     OK        00d 19:11:31*
Lower 10
 Lane 0      Up    Up      100Gb/s     -3.1 dBm N/A     OK        00d 19:11:31*
 Lane 1      Up    Up      100Gb/s     -3.3 dBm N/A     OK        00d 19:11:32*
 Lane 2      Up    Up      100Gb/s     -2.9 dBm N/A     OK        00d 19:11:32*
 Lane 3      Up    Up      100Gb/s     -2.9 dBm N/A     OK        00d 19:11:32*
Lower 11
 Lane 0      Up    Up      100Gb/s     -2.1 dBm N/A     OK        00d 19:11:30*
 Lane 1      Up    Up      100Gb/s     -2.4 dBm N/A     OK        00d 19:11:30*
 Lane 2      Up    Up      100Gb/s     -2.3 dBm N/A     OK        00d 19:11:30*
 Lane 3      Up    Up      100Gb/s     -2.2 dBm N/A     OK        00d 19:11:30*
Upper 0
 Lane 0      Up    Up      400Gb/s     -4.0 dBm 26.0    OK        00d 19:11:32*
Upper 1
 Lane 0      Up    Up      400Gb/s     -3.7 dBm 27.0    OK        00d 19:11:32*
Upper 2
 Lane 0      Up    Up      400Gb/s     -4.5 dBm 28.0    OK        00d 19:11:33*
Upper 3
 Lane 0      Up    Up      400Gb/s     -5.2 dBm 29.0    OK        00d 19:11:33*
Upper 4
 Lane 0      Up    Up      400Gb/s     -6.2 dBm 30.0    OK        00d 19:11:33*
Upper 5
 Lane 0      Up    Up      400Gb/s     -6.2 dBm 31.0    OK        00d 19:11:34*
Upper 6
 Lane 0      Up    Up      400Gb/s     -6.3 dBm 32.0    OK        00d 19:11:34*
Upper 7
 Lane 0      Up    Up      400Gb/s     -6.0 dBm 33.0    OK        00d 19:11:34*
Upper 8
 Lane 0      Up    Up      400Gb/s     -7.5 dBm 34.0    OK        00d 19:11:34*
Upper 9
 Lane 0      Up    Up      400Gb/s     -6.4 dBm 35.0    OK        00d 19:11:34*
Upper 10
 Lane 0      Up    Up      400Gb/s     -8.1 dBm 36.0    OK        00d 19:11:35*
Upper 11
 Lane 0      Up    Up      400Gb/s     -7.8 dBm 37.0    OK        00d 19:11:35*
```

* No state change since DXMOS started.

#### 6.3.6.4 Confirm Transceiver Installation

Some DarkStar models do not ship with their transceivers installed in the system. Install the transceivers if necessary.



**In a single step for each optical connector, clean the fiber and insert it into the transceiver or adapter. DO NOT clean both ends of the fiber cable at the same time. Rather, clean and insert one end of the fiber cable, then clean and insert the other end.**

#### 6.3.6.5 Determine Transceiver Type

To determine a given transceiver's type on the system, use the `show modules` command. Upper 0 is shown in this example.

```
DFX400-12_Location1# show modules upper 0

Upper 0    Up
  Description: .... N/A
  Tx: ............. OK                          Rx: .......... OK
  State Changed: .. 00d 20:14:34*               Channel: ..... 26.0
  Tx Laser: ....... Enabled                     Frequency: ... 192000 GHz
  Tx Power: ....... -8.5 dBm                    Wavelength: .. 1561.42 nm
  Rx Power: ....... -4.0 dBm                    Module Type: . Tunable QSFP-DD
  Loopback: ....... Off                         Temperature: . 64 C
  Encapsulation: .. 4x100GAUI-2                 Vendor: ...... HG GENUINE
  Last Cleared: ... 00d 20:12:23                Part No.: .... CTR-D2F5C-A
  Link Downtime: .. 00d 00:00:00                Serial No.: .. 3000358260071
  Maximum Reach: .. Unknown                     MFG Date: .... 260508
  BERT Enabled: ... Transmit, Receive           BERT Time: ... 00d 20:05:17
  BERT Error Count: 0                           BERT Status: . OK
```

#### 6.3.6.6 Configuring Optical Transport Service for DFX400-12

DFX400 models are delivered equipped with QSFP28 or QSFP-DD client modules. See the models that were purchased to confirm the transceiver type installed.

DXMOS running on DFX400 models have lower-to-upper connections already in place. Lower module 0 is dedicated to upper module 0, for example. The only setting that needs to be configured is the desired encapsulation. The available encapsulations are determined by what encapsulations both transceivers share. To see the available encapsulation options, type the `encapsulation` command.

Once your equipment has been connected to client/lane ports using jumper fibers, the DarkStar system must be provisioned for transport service using the following procedure:

1. Enter enable mode and then type `configure` to enter configure mode.
2. Select a module in the pair to define the encapsulation; for example, `module lower 0`.
3. Type `encapsulation` followed by <Tab> (or "?") to list the available encapsulation types. Select the desired type.
4. Connect to the remote DarkStar system on the other end of the fiber line and, using the same process, select the same encapsulation.
5. Save the updated configuration with a `write memory` for each system.

**Note:** There is a default encapsulation type if one is not specified by the user. Two DarkStar systems will not pass data if there is a mismatch in encapsulation types between the two systems. Make sure both systems have been configured similarly, using the same encapsulation type.

# 6.4 Mux/Demux with Amplifier System (DMD-A)

This section uses the DMD-A as the mux/demux example. If you are testing with a passive mux/demux (i.e., DMD-P), there will be notable front-panel feature differences. Refer to the sales collateral that came with that system.

## 6.4.1 DMD-A

To connect a DMD-A system, as shown in Figure 6-14, with its DarkStar transponder counterpart, see Transponders. However, before you do, familiarize yourself with this section.

**Note:** The DMD-A in this example comes with an Input and Output EDFA, as well as Line Protection.

**FIGURE 6-14. DMD-A with Input and Output EDFA, and Line Protection**

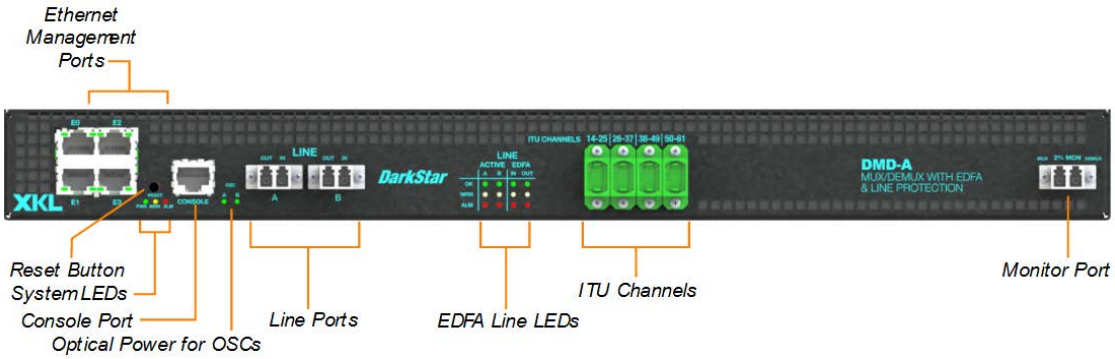


### 6.4.1.1 OSC

Your DMD-A system comes equipped with two OSC line transceivers. The following subsections detail how to determine the transceiver type and monitor the receiver power levels.

#### 6.4.1.1.1 Determine OSC Transceiver Type

```
DMD-A_Location1# show modules all

OSC West    Up
  Description: .... Seattle_to_Redmond
  Tx: ............. OK                          Rx: .......... OK
  State Changed: .. 00d 00:19:13                Channel: ..... N/A
  Tx Laser: ....... Enabled                     Frequency: ... 198406 GHz
  Tx Power: ....... 0.7 dBm                     Wavelength: .. 1511.00 nm
  Rx Power: ....... -10.7 dBm                   Module Type: . SFP
  Loopback: ....... Not Supported               Temperature: . 30 C
  Encapsulation: .. 100Base-FX                  Vendor: ...... OPLINK
  Last Cleared: ... 00d 00:18:26                Part No.: .... TRPE03HL2C00030G
  Link Downtime: .. 00d 00:00:00                Serial No.: .. Z191323XL
  Maximum Reach: .. 80 km on SM                 MFG Date: .... 190601
```

```
OSC East    Up
  Description: .... Seattle_to_Redmond
  Tx: ............. OK                          Rx: .......... OK
  State Changed: .. 00d 00:19:13                Channel: ..... N/A
  Tx Laser: ....... Enabled                     Frequency: ... 198384 GHz
  Tx Power: ....... 0.4 dBm                     Wavelength: .. 1511.17 nm
  Rx Power: ....... -8.6 dBm                    Module Type: . SFP
  Loopback: ....... Not Supported               Temperature: . 26 C
  Encapsulation: .. 100Base-FX                  Vendor: ...... OpticalZonu
  Last Cleared: ... 00d 00:18:27                Part No.: .... AF6-D51FZ-LU-XK
  Link Downtime: .. 00d 00:00:00                Serial No.: .. 210512112
  Maximum Reach: .. 100 km on SM                MFG Date: .... 210517
```

#### 6.4.1.1.2 Monitor the OSC Receive Power Level

Determine the OSC receive power (RxPow) level by issuing a `show modules` command, as shown in the following example.

```
DMD-A_Location1# show modules
 Interface   Admin  Line    Rate       RxPow     Ch  Transceiver  Last Line Chg
------------ ----- ------- -------- ----------- ---- -----------  -------------
OSC West     Up    Alarm   100Mb/s   <-42.0 dBm N/A  N/A          N/A
OSC East     Up    Alarm   100Mb/s   <-42.0 dBm N/A  N/A          N/A
```

**Note:** You can also obtain the RxPow level with the `show modules all` command, as shown in the previous example (i.e., `Rx Power`). No optical connection to the DMD-A has been made yet, thus the RxPow for each OSC is "<-42dBm."

For the optical power levels for the OSC transceiver, refer to Recommended Transceiver Sensitivity Levels.

> **Caution:** Excessive input power can cause link performance degradation or component damage.

### 6.4.1.2 Raman

Your DMD-A may have been configured with a Raman amplifier. The Raman amplifier power setting needs to be provided by issuing the `control manually-set` command, as shown in the following section. Also, the Raman amplifier is disabled by default and must be enabled by issuing the `no shutdown` command.

#### 6.4.1.2.1 Raman Amplifier Bring-Up Procedure

1. Make sure the Raman amplifier is turned off:

```
CONF-AMP[input raman]# shutdown
```

2. Connect the ingress and egress fiber to the DarkStar system. Before turning on the Raman, there should be at least 25km of fiber connected to the DarkStar ingress (input) fiber.

3. For eye-safe operation, the Raman amplifier requires input signal power be present before the Raman will turn on. Make sure there is signal power at the input of the DarkStar system. In this example, the Raman amplifier is seeing -20.5dBm of input power. If there is no signal power, the Raman will not turn on.

```
CONF-AMP[input raman]# do show amplifier input raman


Detailed information for Amplifier Input Raman
  Module is administratively down
  Module Status
    State .................. Warn
    Control mode ........... Manually-set (Power Control)
    Channel-count ..........    N/A
    Calculated Setpoint ....    N/A
    Applied Setpoint .......  600.0 mW
    Case temperature .......   45.7 C
    Shutdown due to LOS .... Enabled
  Pump 1 Status
    Pump bias current ......    1.0 mA (Disabled)
    Pump EOL bias current .. 1250.0 mA
    Pump temperature .......   24.8 C
  Pump 2 Status
    Pump bias current ......    0.9 mA (Disabled)
    Pump EOL bias current .. 1350.0 mA
    Pump temperature .......   24.8 C
  Signal Levels
    Input power ............  -20.5 dBm
    Total output power .....  -40.0 dBm
    Signal output power ....  -40.0 dBm
    Signal gain ............    0.0 dB
  Alarms
    AOP/Abnormal output power
  Module Identification
    Role ................... Pre-amplifier
    Path ................... Line input
    APC Setpoint Max .......  700.0 mW
```

4. The Raman amplifier can be turned on. We recommend setting the power to a low power value first to make sure there are no problems with the fiber connections. In this example, the Raman amplifier is set to 150mW:

```
CONF-AMP[input raman]# control manually-set power 150
CONF-AMP[input raman]# no shutdown
```

5. Verify there are no alarms in the Raman amplifier (Alarms = None)

```
CONF-AMP[input raman]# do show amplifier input raman

Detailed information for Amplifier Input Raman
  Module is administratively up
  Module Status
    State ................. Up
    Control mode ........... Manually-set (Power Control)
    Channel-count ..........    N/A
    Calculated Setpoint ....    N/A
    Applied Setpoint .......  150.0 mW
    Case temperature .......   40.8 C
    Shutdown due to LOS .... Enabled
  Pump 1 Status
    Pump bias current ......  295.7 mA (Up)
    Pump EOL bias current .. 1250.0 mA
    Pump temperature .......   24.7 C
  Pump 2 Status
    Pump bias current ......  323.6 mA (Up)
    Pump EOL bias current .. 1350.0 mA
    Pump temperature .......   24.6 C
  Signal Levels
    Input power ............  -17.3 dBm
    Total output power .....  150.0 mW (21.8 dBm)
    Signal output power ....  -17.3 dBm
    Signal gain ............   3.03 dB
  Alarms
     None
  Module Identification
    Role ................... Pre-amplifier
    Path ................... Line input
    APC Setpoint Max .......  700.0 mW
```

6. If there are no alarms, then set the Raman amplifier to the power level you require and verify there are still no alarms:

```
CONF-AMP[input raman]# control manually-set power 600
CONF-AMP[input raman]# do show amplifier input raman

Detailed information for Amplifier Input Raman
  Module is administratively up
  Module Status
    State ................. Up
    Control mode ........... Manually-set (Power Control)
    Channel-count ..........    N/A
    Calculated Setpoint ....    N/A
    Applied Setpoint .......  600.0 mW
    Case temperature .......   37.5 C
    Shutdown due to LOS .... Enabled
  Pump 1 Status
    Pump bias current ...... 1076.6 mA (Up)
    Pump EOL bias current .. 1250.0 mA
    Pump temperature .......   26.3 C
  Pump 2 Status
    Pump bias current ...... 1186.8 mA (Up)
    Pump EOL bias current .. 1350.0 mA
    Pump temperature .......   26.5 C
```

```
Signal Levels
  Input power ............   -8.8 dBm
  Total output power .....  600.0 mW (28.1 dBm)
  Signal output power ....   -8.8 dBm
  Signal gain ............  12.80 dB
Alarms
   None
Module Identification
  Role ................... Pre-amplifier
  Path ................... Line input
  APC Setpoint Max .......  700.0 mW
```

#### 6.4.1.3 EDFA

Your DMD-A may have been configured with one or more EDFAs. The EDFA output power setting depends on the number of DWDM channels in your system. The EDFA power settings will be automatically adjusted by DXMOS once you issue the `control automatic` command for the total number of DWDM channels, as shown in the following section. Also, each EDFA is disabled by default and must be enabled by issuing the `no shutdown` command on each EDFA in the system.

##### 6.4.1.3.1 Issue the "control automatic" Command

Configure the power setting for all EDFAs automatically. For example, in Figure 6-6 of the Transponders section, we show twelve 10G channels connected to the DMD-A. In that case, the `control automatic` command would be as follows:

```
DMD-A_Location1 CONF# amplifier input edfa
DMD-A_Location1 CONF-AMP[input edfa]# control automatic channel-count 12
DMD-A_Location1 CONF-AMP[input edfa]# exit
DMD-A_Location1 CONF# amplifier output edfa
DMD-A_Location1 CONF-AMP[output edfa]# control automatic channel-count 12
DMD-A_Location1 CONF-AMP[output edfa]# exit
```

For details on configuring EDFAs, refer to the DarkStar *Command Reference*, available on the XKL website.

#### 6.4.1.4 Connect the DMD-A Systems

This section consists of the following steps:

1. Note the state of the DMD-A with no optical connections.
2. Connect the DMD-A line and mux/demux ports.
3. Enable each EDFA.

The input power to an Output EDFA (i.e., Booster) comes from the attached transponder system. The input power to an Input EDFA (i.e., Preamp) comes from the Line A or Line B ports, which are connected to the other DMD-A system.

**Step 1: Note the state of the DMD-A with (as of yet) no optical connections.**

**a.** Before connecting the DMD-A system to the Line ports or to a Transponder system, issue the `do show amplifier` command at `DMD-A_Location1` and note the receive and transmit power levels (RxPow and TxPow respectively), as well as the Admin State and Module State. Also note that the Control Setpoint shows the EDFA target transmit-power levels, which are values that are defined by DXMOS after the "control automatic" command was issued (as described in 6.4.1.3.1).

```
DMD-A_Location1 CONF# do show amplifier

                                  Admin  Ctrl   Control    RxPow   TxPow   Module
Amplifier                Role     State  Mode   Setpoint   (dBm)   (dBm)   State
-----------------------  -------  -----  ----  ---------  ------  ------  -------
Input EDFA               Preamp   Down   APC    5.7dBm    ~-36.5  -40.0    Warn
Output EDFA              Booster  Down   APC   20.0dBm    ~-47.4  -40.0    Warn
```

In the output above, the receive power (RxPow) will be very low (around -40dBm) and the transmit power (TxPow) will be off (i.e., -40).

**b.** Issue the `do show modules` command at `DMD-A_Location1` to determine the RxPow values for the OSCs. Note that because the DMD-A is not connected to the Line port, the OSC RxPow is very low (<-42.0dBm).

```
DMD-A_Location1 CONF# do show modules

 Interface   Admin  Line     Rate       RxPow     Ch  Transceiver  Last Line Chg
------------ -----  -------- -------- ----------- ---- -----------  -------------
OSC West     Up     Alarm    100Mb/s   <-42.0 dBm N/A  N/A          N/A
OSC East     Up     Alarm    100Mb/s   <-42.0 dBm N/A  N/A          N/A
```

**Step 2: Connect the DMD-A line and mux/demux ports.**

**a.** As illustrated in Figure 6-6, connect the Line A and B ports of the DMD-A at `DMD-A_Location1` to the Line A and B ports of the DMD-A at `DMD-A_Location2`. Note that only the OSC is enabled by default in the DMD-A system; the EDFAs are disabled.

**b.** Issue the `do show modules` command again at `DMD-A_Location1` and verify that the OSC RxPow has changed and the Line state of the OSCs is "Up."

```
DMD-A_Location1 CONF# do show modules

 Interface   Admin  Line     Rate       RxPow     Ch  Transceiver  Last Line Chg
------------ -----  -------- -------- ----------- ---- -----------  -------------
OSC West     Up     Up       100Mb/s    -10.5 dBm N/A  N/A          N/A
OSC East     Up     Up       100Mb/s    -13.5 dBm N/A  N/A          N/A
```

**c.** Connect the DMD-A mux/demux ports to the DarkStar transponder system, as illustrated in Figure 6-6.

**Note:** See XKL Sales for specific DMD cables used in your application.

**d.** Issue the `do show amplifier` command at `DMD-A_Location1` and verify that the Output EDFA shows an RxPow value, meaning that the DWDM waves from the transponder are multiplexed together and are being received by the Output EDFA.

```
DMD-A_Location1 CONF# do show amplifier

                                  Admin  Ctrl    Control    RxPow   TxPow   Module
Amplifier                Role     State  Mode    Setpoint   (dBm)   (dBm)   State
-----------------------  -------  -----  ----  ----------  ------  ------  -------
                                        Power
Input EDFA               Preamp   Down   Control    5.7dBm  ~-36.5  -40.0    Warn
                                        Power
Output EDFA              Booster   Down  Control   20.0dBm    2.8  -40.0    Warn
```

The Input EDFA at `DMD-A_Location1`, on the other hand, still shows a low RxPow value. This is because the Output EDFA for `DMD-A_Location2` in the network has not been enabled yet. (The Output EDFA at Location 2 is generating the optical power that is received by the Input EDFA of Location 1.)

Also, because we have not yet enabled the EDFAs, the TxPow still shows "-40.0," while the Admin State and Module State still show "Down" and "Warn" respectively.

**Step 3: Enable each EDFA.**

**Important:** Only begin this step after you have completed Steps 1 and 2.

Issue the `no shutdown` command from the associated prompt (i.e., "input edfa" or "output edfa"). Do this for each DMD-A system (i.e., `DMD-A_Location1` and `DMD-A_Location2`).

**a.** Enable the Input EDFA:

```
DMD-A_Location1 CONF# amplifier input edfa

DMD-A_Location1 CONF-AMP[input edfa]# no shutdown
Amplifier Input EDFA: DXMOS enabled the EDFA
Amplifier Input EDFA: Pump is active
DMD-A_Location1 CONF-AMP[input edfa]# exit

DMD-A_Location1 CONF#
```

**b.** Enable the Output EDFA:

```
DMD-A_Location1 CONF# amplifier output edfa

DMD-A_Location1 CONF-AMP[output edfa]# no shutdown
Amplifier Output EDFA: DXMOS enabled the EDFA
Amplifier Output EDFA: Pump is active
DMD-A_Location1 CONF-AMP[output edfa]# exit

DMD-A_Location1 CONF#
```

**c.** After enabling the Input and Output EDFAs on both DMD-A systems, issue the `do show amplifier` command at `DMD-A_Location1` and note the valid TxPow levels. Also verify that the Control Setpoint and TxPow values for the Input EDFA are approximately the same. Likewise, verify that the Control Setpoint and TxPow values for the Output EDFA are approximately the same. The Admin State and Module State should be both "Up" as well.

```
DMD-A_Location1 CONF# do show amplifier

                                    Admin  Ctrl   Control    RxPow   TxPow   Module
Amplifier                Role       State  Mode   Setpoint   (dBm)   (dBm)   State
-----------------------  -------  -----  ----  ---------  ------  ------  -------
Input EDFA               Preamp       Up   APC   5.7dBm    -9.9     5.6       Up
Output EDFA              Booster      Up   APC  20.0dBm     2.8    20.0       Up
```

**d.** Lastly, compare that power level against the minimum (Min) and maximum (Max) values for "Total Operating Input Power (dBm)" in Table B-6, EDFA Optical Specifications.

# 6.5 Inline Amplifiers

This section addresses the DLA.

## 6.5.1 DLA

The inline amplifier, the DarkStar DLA, is shown in Figure 6-15.

**FIGURE 6-15. DLA- Inline Amplifier**

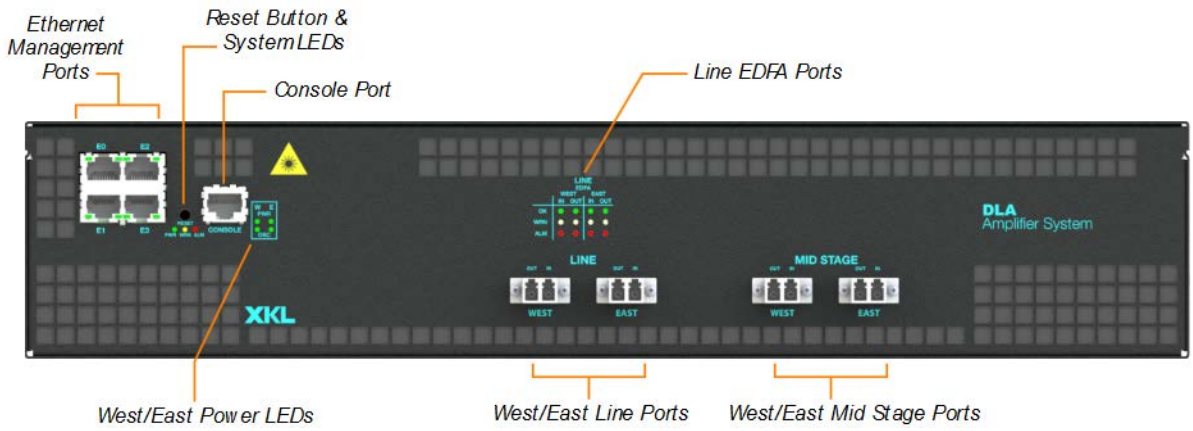


The line port of each DarkStar DLA system needs to be connected with single-mode (SM) fiber.

With the cleaned fiber, connect the DLA systems via their line ports. Examples of a network using DLAs is shown in Figure 6-16 and Figure 6-17.

**FIGURE 6-16. Amplified Links Using DLA**

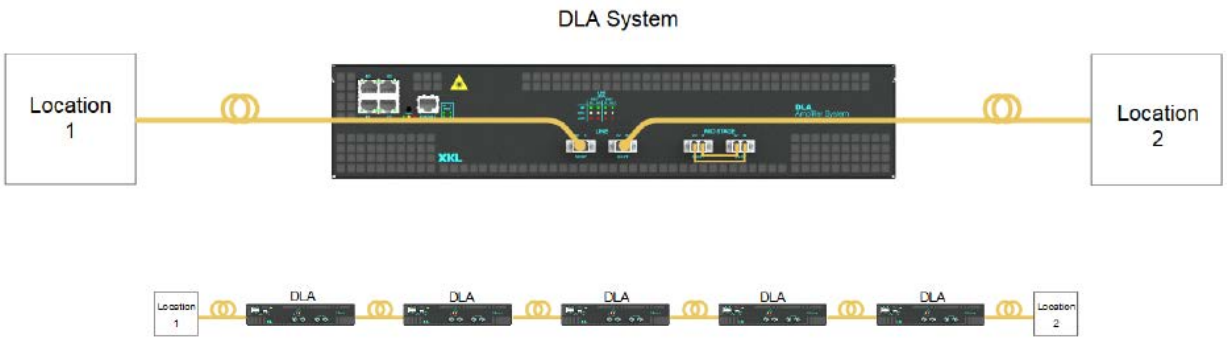


**Important**: If the Mid Stage access ports, located to the right of the line ports, are not being used, make sure to connect them using a "straight-through" cable configuration; i.e., connect Mid Stage West Out to Mid Stage East In and connect Mid Stage West In to Mid Stage East Out.

**FIGURE 6-17. DLA: Location 3 Connected to Mid-Stage Port**

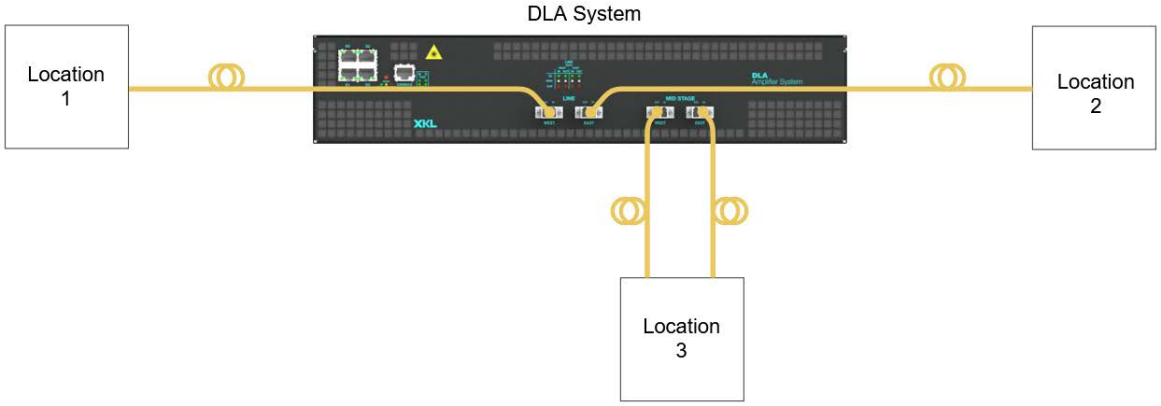


For proper operation of Darkstar systems and reliable data transmission, the DLA systems in your network topology must be configured and enabled in succession. Referring to Figure 6-16, the muxponder/DMD-A system should be enabled first at Location 1, followed by a bring-up procedure going from west-to-east through DLA 1, 2, 3, 4, 5 to Location 2. After your data has transmitted to Location 2, the bring-up procedure can then be applied from east-to-west through DLA 5, 4, 3, 2, 1 and back to Location 1. If the mid-stage ports are being used as shown in Figure 6-17, the system at Location 3 must be configured and enabled prior to setting up the system downstream of your DLA.

#### 6.5.1.1 OSC

Your DLA system comes equipped with two OSC line transceivers. The following subsections detail how to determine the transceiver type and monitor the receive power level.

##### 6.5.1.1.1 Determine OSC Transceiver type

Your DLA system comes equipped with two line OSC transceivers. Determine their type with the `show modules all` command, as in the following example.

```
DLA_System1> show modules all

OSC West    Up
  Description: .... Seattle_to_Redmond
  Tx: ............. OK                          Rx: .......... LOS
  State Changed: .. 00d 22:19:13                Channel: ..... N/A
  Tx Laser: ....... Enabled                     Frequency: ... 198384 GHz
  Tx Power: ....... 0.4 dBm                     Wavelength: .. 1511.17 nm
  Rx Power: ....... -22.6 dBm                   Module Type: . SFP
  Loopback: ....... Not Supported               Temperature: . 30 C
  Encapsulation: .. 100Base-FX                  Vendor: ...... OpticalZonu
  Last Cleared: ... 00d 19:05:41                Part No.: .... AF6-D51FZ-LU-XK
  Link Downtime: .. 00d 00:00:00                Serial No.: .. 210512107
  Maximum Reach: .. 100 km on SM                MFG Date: .... 210517

OSC East    Up
  Description: .... Seattle_to_Redmond
  Tx: ............. OK                          Rx: .......... LOS
  State Changed: .. 00d 22:19:14                Channel: ..... N/A
  Tx Laser: ....... Enabled                     Frequency: ... 198406 GHz
  Tx Power: ....... 3.1 dBm                     Wavelength: .. 1511.00 nm
  Rx Power: ....... -25.0 dBm                   Module Type: . SFP
  Loopback: ....... Not Supported               Temperature: . 35 C
  Encapsulation: .. 100Base-FX                  Vendor: ...... OPLINK
  Last Cleared: ... 00d 19:05:41                Part No.: .... TRPE03KE2C00030G
  Link Downtime: .. 00d 00:00:00                Serial No.: .. Z21160PLQ
  Maximum Reach: .. 140 km on SM                MFG Date: .... 21043
```

##### 6.5.1.1.2 Monitor the OSC receive power level

Determine the OSC receive power (RxPow) level by issuing a `show modules` command, as shown in the following example.

```
DLA_System1> show modules

 Interface   Admin  Line    Rate       RxPow     Ch  Transceiver  Last Line Chg
------------ ----- ------- -------- ----------- ---- -----------  -------------
OSC West     Up    Up      100Mb/s   -22.6 dBm  N/A  N/A          00d 22:21:25
OSC East     Up    Up      100Mb/s   -25.0 dBm  N/A  N/A          00d 22:21:25
```

**Note:** You can also obtain the RxPow level with the `show modules all` command, as shown in the previous example (i.e., `Rx Power`).

For the optical power levels for the OSC transceiver, refer to Recommended Transceiver Sensitivity Levels.

> **Caution:** Excessive input power can cause link performance degradation or component damage.

#### 6.5.1.2 Bring-Up Procedure

Assuming an upstream (Location 1 in Figure 6-16) muxponder, DMD-A, or another DLA has been optically connected to one of your DLA line ports, your system is ready to be configured (refer to section 6.2/6.4 for configuring a muxponder/DMD-A system). Prior to setting the optical components on your DLA, the OSC receive power level must be adequate. After verifying your DLA's receive power level is sufficient, the following optical components, that are present in your DLA, ***must*** be configured and enabled in the following order:

Raman
Input EDFA
DGE-OCM
Output EDFA

**Important**: Failure to configure the optical components in this order may result in incorrect amplifier settings.

If the mid-stage ports are being used as shown in Figure 6-17, the system at location 3 must be configured and enabled prior to setting and enabling the DGE-OCM and the output EDFA. After configuring your DLA, the system downstream (Location 2 in Figure 6-16) of this DLA is ready to be configured. The following sections provide more details on configuring each optical element.

#### 6.5.1.3 Raman

Your DLA may have been configured with up to two Raman amplifiers. The Raman amplifier power setting needs to be provided by issuing the `control manually-set` command, as shown in the following section. Also, the Raman amplifiers are disabled by default and must be enabled by issuing the `no shutdown` command.

##### 6.5.1.3.1 Raman Amplifier Bring-up Procedure

1. Make sure the Raman amplifier is turned off:

```
CONF-AMP[west input raman]# shutdown
```

2. Connect the ingress and egress fiber to the DarkStar system. Before turning on the Raman, there should be a significant amount of fiber connected to the DarkStar ingress (input) fiber.

3. For eye-safe operation, the Raman amplifier requires input signal power be present before the Raman will turn on. Make sure there is signal power at the input of the DarkStar system. In this example, the Raman amplifier is seeing -20.5dBm of input power. If there is no signal power, the Raman will not turn on.

```
CONF-AMP[west input raman]# do show amplifier west input raman

Detailed information for Amplifier West Input Raman
  Module is administratively down
  Module Status
    State ................. Warn
    Control mode ........... Manually-set (Power Control)
    Channel-count ..........    N/A
    Calculated Setpoint ....    N/A
    Applied Setpoint .......  600.0 mW
    Case temperature .......   45.7 C
```

```
    Shutdown due to LOS .... Enabled
  Pump 1 Status
    Pump bias current ......    1.0 mA (Disabled)
    Pump EOL bias current .. 1250.0 mA
    Pump temperature .......   24.8 C
  Pump 2 Status
    Pump bias current ......    0.9 mA (Disabled)
    Pump EOL bias current .. 1350.0 mA
    Pump temperature .......   24.8 C
  Signal Levels
    Input power ............  -20.5 dBm
    Total output power .....  -40.0 dBm
    Signal output power ....  -40.0 dBm
    Signal gain ............    0.0 dB
  Alarms
    AOP/Abnormal output power
  Module Identification
    Role ................... Pre-amplifier
    Path ................... West Line Input to East Line Output
    APC Setpoint Max .......  700.0 mW
```

4. The Raman amplifier can be turned on. We recommend setting the power to a low power value first to make sure there are no problems with the fiber connections. In this example, the Raman amplifier is set to 150mW:

```
CONF-AMP[west input raman]# control manually-set power 150
CONF-AMP[west input raman]# no shutdown
```

5. Verify there are no alarms in the Raman amplifier (Alarms = None)

```
CONF-AMP[west input raman]# do show amplifier west input raman

Detailed information for Amplifier West Input Raman
  Module is administratively up
  Module Status
    State .................. Up
    Control mode ........... Manually-set (Automatic Power Control)
    Channel-count ..........    N/A
    Calculated Setpoint ....    N/A
    Applied Setpoint .......  150.0 mW
    Case temperature .......   40.8 C
    Shutdown due to LOS .... Enabled
  Pump 1 Status
    Pump bias current ......  295.7 mA (Up)
    Pump EOL bias current .. 1250.0 mA
    Pump temperature .......   24.7 C
  Pump 2 Status
    Pump bias current ......  323.6 mA (Up)
    Pump EOL bias current .. 1350.0 mA
    Pump temperature .......   24.6 C
  Signal Levels
    Input power ............  -17.3 dBm
    Total output power .....  150.0 mW (21.8 dBm)
    Signal output power ....  -17.3 dBm
    Signal gain ............   3.03 dB
```

```
  Alarms
     None
  Module Identification
    Role ..................... Pre-amplifier
    Path ..................... West Line Input to East Line Output
    APC Setpoint Max .......  700.0 mW
```

6. If there are no alarms, then set the Raman amplifier to the power level you require and verify there are still no alarms:

```
CONF-AMP[west input raman]# control manually-set power 600
CONF-AMP[west input raman]#  do show amplifier west input raman

Detailed information for Amplifier West Input Raman
  Module is administratively up
  Module Status
    State ..................... Up
    Control mode ............. Manually-set Automatic Power Control
    Channel-count ..........    N/A
    Calculated Setpoint ....    N/A
    Applied Setpoint .......  600.0 mW
    Case temperature .......   37.5 C
    Shutdown due to LOS .... Enabled
  Pump 1 Status
    Pump bias current ...... 1076.6 mA (Up)
    Pump EOL bias current .. 1250.0 mA
    Pump temperature .......   26.3 C
  Pump 2 Status
    Pump bias current ...... 1186.8 mA (Up)
    Pump EOL bias current .. 1350.0 mA
    Pump temperature .......   26.5 C
  Signal Levels
    Input power ............   -8.8 dBm
    Total output power .....  600.0 mW (28.1 dBm)
    Signal output power ....   -8.8 dBm
    Signal gain ............  12.80 dB
  Alarms
     None
  Module Identification
    Role ..................... Pre-amplifier
    Path ..................... West Line Input to East Line Output
   APC Setpoint Max .......  700.0 mW
```

#### 6.5.1.4 EDFA

Your DLA may have been configured with one or more EDFAs. The EDFA output power setting depends on the number of DWDM channels in your system. The EDFA power settings will be automatically adjusted by DXMOS once you issue the `control automatic` command for the total number of DWDM channels, as shown in the following section.

##### 6.5.1.4.1 Issue the "control automatic" Command for individual amplifier configuration

Configure the power setting for all EDFAs automatically. For example, if we are connecting twelve 10G channels of a DQT10 transponder to the DLA, the `control automatic` command would be as follows:

```
DLA_System1 CONF# amplifier east output edfa
DLA_System1 CONF-AMP[east output edfa]# control automatic channel-count 12
```

```
DLA_System1 CONF-AMP[east output edfa]# exit
DLA_System1 CONF# amplifier west output edfa
DLA_System1 CONF-AMP[west output edfa]# control automatic channel-count 12
DLA_System1 CONF-AMP[west output edfa]# exit
```

For details on configuring EDFAs, refer to the DarkStar *Command Reference*, available on the XKL website.

**Important:** To ensure proper operation of the DLAs after connecting them, make sure that there is sufficient input power to the EDFAs. To do this, first determine the receive power (RxPow) level of the EDFAs by issuing a `do show amplifier` command, as shown in the following example. **Note:** The sample output below shows an amplifier with a loss of signal (LOS).

```
DLA_System1 CONF# do show amplifier

                                Admin  Ctrl   Control   RxPow   TxPow   Module
Amplifier               Role    State  Mode   Setpoint  (dBm)   (dBm)   State
----------------------- ------- -----  ----  --------- -------  ------  -------
East Output EDFA        Booster Down    AGC   8.5dBm   ~-55.5   40.0     LOS
West Output EDFA        Booster Down    APC   8.5dBm   ~-50.0  -40.0     Warn
```

Then compare that power level against the minimum (Min) and maximum (Max) values for "Total Operating Input Power (dBm)" in Table B-6, EDFA Optical Specifications.

#### 6.5.1.4.2 Issue the "control automatic" Command for line amplifier configuration

If your DLA has input and output EDFAs, the setpoint settings for the EDFAs can be configured automatically. For example, if we are connecting ten 10G channels of a DQT10 transponder to the east line input port, the `control automatic` command would be as follows:

```
DLA_System1 CONF# amplifier east-to-west
DLA_System1 CONF-AMP[east-to-west]# control automatic channel-count 10
DLA_System1 CONF-AMP[east-to-west]# exit
```

For details on configuring EDFAs, refer to the DarkStar *Command Reference*, available on the XKL website.

**Important:** If your DLA utilizes the mid-stage port as illustrated in Figure 6-17, do not make use of this line amplifier configuration. Instead, configure the EDFAs individually as shown in Raman Amplifier Bring-up Procedure.

As stated previously in Raman Amplifier Bring-up Procedure, ensure proper operation of the DLA by comparing the receive power level of the EDFAs to the power level values in Table B-6, EDFA Optical Specifications.

```
DLA_System1 CONF# do show amplifier

                                Admin  Ctrl   Control    RxPow   TxPow  Module
Amplifier               Role    State  Mode   Setpoint   (dBm)   (dBm)  State
----------------------- ------- -----  ----  ---------  ------  ------ ------
East Input EDFA         Preamp  Up     APC    -3.3 dBm    -7.1    -3.4 Up
East Output EDFA        Booster Down   D           N/A   -45.5   -40.0 Up
West Input EDFA         Preamp  Down   D           N/A    -6.9   -40.0 Up
West Output EDFA        Booster Up     APC    22.0 dBm    -5.8    16.2 Up
```

**Important**: If a DGE-OCM is present on your DLA, an equalizer plan must be defined in order to see light at the output EDFA. Also, the `control automatic` command for a line amplifier configuration will `flatten` the bands in the defined equalizer plan. This is done to optimize your DLA's amplifier power settings. The west equalizer corresponds with the `east-to-west` line, and the east equalizer corresponds with the `west-to-east` line configuration mode.

### 6.5.1.5 DGE-OCM

Your DLA may have been configured with one or more DGE-OCMs. The DGE can be used to dynamically control optical channel power levels while the OCM measures optical channel power. The DGE-OCM band attenuation settings depends on the number of DWDM channels in your system. The DGE-OCM attenuation settings will be automatically adjusted by DXMOS if you issue the `control automatic` command for line amplifier configurations with the total number of DWDM channels.

#### 6.5.1.5.1 Define an Equalizer plan

Configure the band settings for a single DGE-OCM path manually. For example, if we are connecting ten 10G channels of a DQM10 muxponder to the DLA, the `band` command would be used repeatedly as follows:

```
DLA_System1 CONF# equalizer west
DLA_System1 CONF-EQ[west]# band 17 192000 100
DLA_System1 CONF-EQ[west]# band 18 192100 100
DLA_System1 CONF-EQ[west]# band 19 192200 100
DLA_System1 CONF-EQ[west]# band 20 162300 100
DLA_System1 CONF-EQ[west]# band 21 192400 100
DLA_System1 CONF-EQ[west]# band 22 192500 100
DLA_System1 CONF-EQ[west]# band 23 192600 100
DLA_System1 CONF-EQ[west]# band 24 192700 100
DLA_System1 CONF-EQ[west]# band 25 192800 100
DLA_System1 CONF-EQ[west]# band 26 192900 100
```

For details on configuring DGEs, refer to the DarkStar Command Reference, available on the XKL website.

**Important**: To ensure proper operation of the DLAs after connecting them, make sure that there is sufficient input power to the DGEs. To do this, first detemine the receiver power (OCM RxPow) level of the EDFAs by issuing a `do show equalizer west plan` command, as shown in the following example.

```
DLA_System1 CONF-EQ[west]# do show equalizer west plan
Band      Center           Width         Atten     OCM RxPwr
-------------------------------------------------------------
West  17  192000.000 GHz   100.000 GHz   0.0 dB   -30.6 dBm
West  18  192100.000 GHz   100.000 GHz   0.0 dB   -30.6 dBm
West  19  192200.000 GHz   100.000 GHz   0.0 dB   -31.2 dBm
West  20  192300.000 GHz   100.000 GHz   0.0 dB   -31.5 dBm
West  21  192400.000 GHz   100.000 GHz   0.0 dB   -31.8 dBm
West  22  192500.000 GHz   100.000 GHz   0.0 dB   -31.7 dBm
West  23  192600.000 GHz   100.000 GHz   0.0 dB   -31.5 dBm
West  24  192700.000 GHz   100.000 GHz   0.0 dB   -31.9 dBm
West  25  192800.000 GHz   100.000 GHz   0.0 dB   -31.2 dBm
West  26  192900.000 GHz   100.000 GHz   0.0 dB   -31.6 dBm
```

```
DLA_System1 CONF-EQ[west]#
```

Then compare that power level against the minimum (Min) and maximum (Max) values for "Total Operating Input Power (dBm)" in Table B-8, DGE-OCM Optical Specifications.

# 6.6 Utility Amplifiers

This section addresses the DUA.

## 6.6.1 DUA

The DUA system, DarkStar Utility Amplifier, is a fully integrated optical amplifier solution. All components in this system can be managed and controlled via the DXMOS operating system, which is the common operating system for all products in the XKL DarkStar family of optical networking solutions. Each DUA system optionally includes up to 8 Erbium Doped Fiber Amplifiers (EDFAs), 2 Raman Amplifiers, and 4 OTDR/OSC transceivers. Note that if 1 or 2 Raman Amplifiers are included in the system build, then at most 4 EDFAs can be installed.

**FIGURE 6-18. DUA- Utility Amplifier**

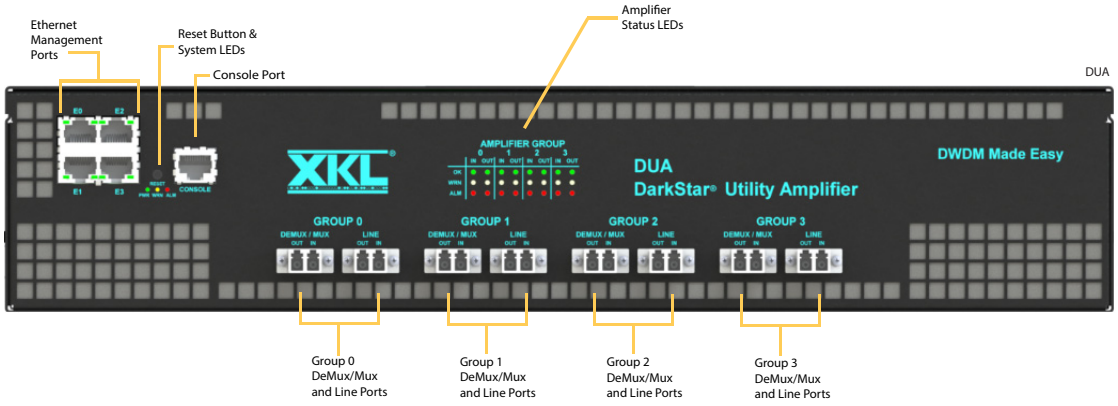

**FIGURE 6-19. Examples of a network using DUAs**

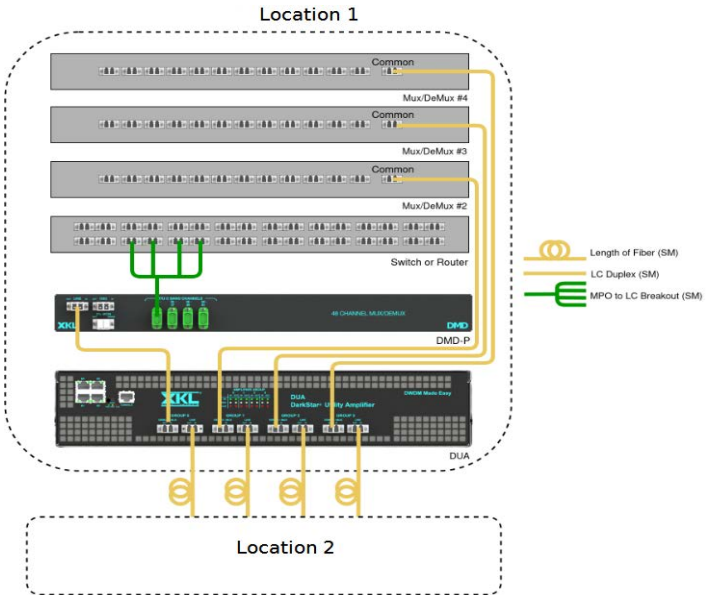


### 6.6.1.1 Groups of optical components

Your DUA system may have been configured with up to 4 groups of optical components (EDFAs, Ramans, OTDR/OSC transceivers) for easily monitoring and managing optical pathways.

Display your DUA group's optical components with the `show group` command, as shown in the following example:

```
DUA# show group

Group 0:
                                    Admin  Ctrl   Control   RxPow   TxPow  Module
Amplifier                 Role      State  Mode   Setpoint  (dBm)   (dBm)  State
------------------------  -------   -----  ----  ---------  ------  ------ ------
Input EDFA                Preamp    Down   APC     0.5 dBm   -50.0   -40.0 LOS
Output EDFA               Booster   Down   D           N/A   -50.0   -40.0 LOS

Management Interface Admin  Line   Type      IP Address
-------------------- ------ ------ --------- ----------------------------------
OSC 0                Down   Down   LAN

Module       Admin Line    Rate     RxPow       Ch   Transceiver  Last Line Chg
------------ ----- ------- -------- ----------- ---- -----------  -------------
OSC 0        Down  Alarm   100Mb/s    -40.0 dBm N/A  N/A          00d 17:36:54*

OTDR OSC[0] (Group 0)
  Automatic Mode: . Enabled
```

```
  Last Result: .... Not Measured
```

---

```
Group 1:

                                  Admin  Ctrl   Control   RxPow   TxPow  Module
Amplifier                Role     State  Mode   Setpoint  (dBm)   (dBm)  State
-----------------------  -------  -----  ----  ---------  ------  ------ ------
Input EDFA               Preamp   Down   D           N/A   -39.0   -40.0 LOS
Output EDFA              Booster  Down   APC     6.5 dBm    -9.9   -40.0 Down

Management Interface Admin  Line   Type      IP Address
-------------------- ------ ------ --------- ----------------------------------
OSC 1                Down   Down   LAN

Module       Admin Line    Rate     RxPow       Ch   Transceiver  Last Line Chg
------------ ----- ------- -------- ----------- ---- -----------  -------------
OSC 1        Down  Alarm   100Mb/s    -40.0 dBm N/A  N/A          00d 17:36:54*
```

---

```
Group 2:

                                  Admin  Ctrl   Control   RxPow   TxPow  Module
Amplifier                Role     State  Mode   Setpoint  (dBm)   (dBm)  State
-----------------------  -------  -----  ----  ---------  ------  ------ ------
Input EDFA               Preamp   Down   APC     6.5 dBm   -35.4   -40.0 LOS
Output EDFA              Booster  Down   APC     8.3 dBm   -50.8   -40.0 LOS

Management Interface Admin  Line   Type      IP Address
-------------------- ------ ------ --------- ----------------------------------
OSC 2                Down   Down   LAN

Module       Admin Line    Rate     RxPow       Ch   Transceiver  Last Line Chg
------------ ----- ------- -------- ----------- ---- -----------  -------------
OSC 2        Down  Alarm   100Mb/s    -40.0 dBm N/A  N/A          00d 17:36:54*

OTDR OSC[2] (Group 2)
  Automatic Mode: . Enabled
  Last Result: .... Not Measured
```

---

```
Group 3:

                                  Admin  Ctrl   Control   RxPow   TxPow  Module
Amplifier                Role     State  Mode   Setpoint  (dBm)   (dBm)  State
-----------------------  -------  -----  ----  ---------  ------  ------ ------
Input EDFA               Preamp   Down   D           N/A   -42.6   -40.0 LOS
Output EDFA              Booster  Down   APC     8.8 dBm   -47.8   -40.0 LOS

Management Interface Admin  Line   Type      IP Address
-------------------- ------ ------ --------- ----------------------------------
OSC 3                Down   Down   LAN
```

```
Module       Admin Line    Rate     RxPow       Ch   Transceiver  Last Line Chg
------------ ----- ------- -------- ----------- ---- -----------  -------------
OSC 3        Down  Alarm   100Mb/s    -40.0 dBm N/A  N/A          00d 17:36:54*

DUA#
```

Enter the `CONF-GROUP#` mode to configure the group's name and optical components, as shown in the following examples:

```
DUA# conf

DUA CONF# group 2

DUA CONF-GROUP[2]# name redmond-to-seattle

DUA CONF-GROUP[redmond-to-seattle]#

Group component, one of the following:
 amplifier
 management
 module
 otdr

Command, one of the following:
 do
 end
 exit
 name
 no
 show

DUA CONF-GROUP[redmond-to-seattle]#
```

### 6.6.1.2 OSC

#### 6.6.1.2.1 Determine OTDR/OSC transceivers

Your DUA system may have been configured with up to 4 OTDR/OSC transceivers which are located in groups. Determine the OTDR/OSC transceivers and their groups with the `show modules all`, as shown in the following example:

```
DUA# show modules all

Group 0 OSC    Down
 Description: .... N/A
 Tx: ............. OK                          Rx: .......... LOS
 State Changed: .. >00d 01:30:46              Channel: ..... N/A
 Tx Laser: ....... Enabled                    Frequency: ... 198384 GHz
 Tx Power: ....... 0.6 dBm                    Wavelength: .. 1511.17 nm
 Rx Power: ....... -40.0 dBm                  Module Type: . SFP
 Loopback: ....... Not Supported              Temperature: . 40 C
 Encapsulation: .. 100Base-FX                 Vendor: ...... OpticalZonu
 Last Cleared: ... 00d 01:29:52               Part No.: .... AF6-D51FZ-LU-XK
 Link Downtime: .. 00d 01:30:46               Serial No.: .. 210512109
 Maximum Reach: .. 100 km on SM               MFG Date: .... 210514
```

```
Group 1 OSC    Up
 Description: .... N/A
 Tx: ............. OK                          Rx: .......... OK
 State Changed: .. >00d 01:30:47              Channel: ..... N/A
 Tx Laser: ....... Enabled                    Frequency: ... 198406 GHz
 Tx Power: ....... 0.0 dBm                    Wavelength: .. 1511.00 nm
 Rx Power: ....... -13.4 dBm                  Module Type: . SFP
 Loopback: ....... Not Supported              Temperature: . 45 C
 Encapsulation: .. 100Base-FX                 Vendor: ...... OPLINK
 Last Cleared: ... 00d 01:29:52               Part No.: .... TRPE03HL2C00030G
 Link Downtime: .. 00d 00:00:00               Serial No.: .. Z191323QR
 Maximum Reach: .. 80 km on SM                MFG Date: .... 190530


Group 2 OSC    Up
 Description: .... N/A
 Tx: ............. OK                          Rx: .......... OK
 State Changed: .. >00d 01:30:47              Channel: ..... N/A
 Tx Laser: ....... Enabled                    Frequency: ... 198384 GHz
 Tx Power: ....... -0.2 dBm                   Wavelength: .. 1511.17 nm
 Rx Power: ....... -7.5 dBm                   Module Type: . SFP
 Loopback: ....... Not Supported              Temperature: . 35 C
 Encapsulation: .. 100Base-FX                 Vendor: ...... OpticalZonu
 Last Cleared: ... 00d 01:29:52               Part No.: .... AF6-D51FZ-LU-XK
 Link Downtime: .. 00d 00:00:00               Serial No.: .. 210215105
 Maximum Reach: .. 100 km on SM               MFG Date: .... 210517


Group 3 OSC    Down
 Description: .... N/A
 Tx: ............. OK                          Rx: .......... LOS
 State Changed: .. >00d 01:30:47              Channel: ..... N/A
 Tx Laser: ....... Enabled                    Frequency: ... 198406 GHz
 Tx Power: ....... 0.0 dBm                    Wavelength: .. 1511.00 nm
 Rx Power: ....... -40.0 dBm                  Module Type: . SFP
 Loopback: ....... Not Supported              Temperature: . 44 C
 Encapsulation: .. 100Base-FX                 Vendor: ...... OPLINK
 Last Cleared: ... 00d 01:29:52               Part No.: .... TRPE03HL2C00030G
 Link Downtime: .. 00d 01:30:47               Serial No.: .. Z1921039F
 Maximum Reach: .. 80 km on SM                MFG Date: .... 190601


Note: '>' means knowledge of elapsed time doesn't extend into past beyond number
shown.
DUA#
```

#### 6.6.1.2.2 Monitor the OTDR/OSC receive power level

Determine the OTDR/OSC receive power (RxPow) level by issuing the `show modules` command, as shown in the following example.

```
DUA# show modules

 Interface   Admin  Line    Rate       RxPow     Ch  Transceiver  Last Line Chg
```

```
------------ ----- ------- -------- ----------- ---- -----------  -------------
OSC 0        Down  Alarm   100Mb/s    -40.0 dBm N/A  N/A          00d 01:34:40*
OSC 1        Down  Up      100Mb/s    -13.4 dBm N/A  N/A          00d 01:34:40*
OSC 2        Down  Up      100Mb/s     -7.5 dBm N/A  N/A          00d 01:34:40*
OSC 3        Down  Alarm   100Mb/s    -40.0 dBm N/A  N/A          00d 01:34:40*

* No state change since DXMOS started.

DUA#
```

**Note:** You can also obtain the RxPow level with the `show modules all` command, as shown in the previous example (i.e., Rx Power).

For the optical power levels for the OTDR/OSC transceiver, refer to Recommended Transceiver Sensitivity Levels.

> **Caution:** Excessive input power can cause link performance degradation or component damage.

#### 6.6.1.3 Bring-Up procedure

The Bring-Up procedure assumes Group 0 in your DUA system contains a Raman, an Input EDFA, an Ouput EDFA and an OTDR/OSC transceiver. Prior to setting the optical components on your DUA system, the OTDR/OSC receive power level must be adequate (for more information on OTDR behavior see the DarkStar *Command Reference* available on the XKL website.). After verifying Group 0's OTDR/OSC receive power is sufficient, the following optical components, that are present in Group 0, ***must*** be configured and enabled in the following order:

Raman
Input EDFA
Output EDFA

**Note:** Repeat the same steps for other Groups in your DUA system.

**Important:** Failure to configure the optical components in this order may result in incorrect amplifier settings.

#### 6.6.1.4 Raman

The Raman amplifier power setting needs to be provided by issuing the `control manually-set` command, as shown in the following section. Also, the Raman amplifiers are disabled by default and must be enabled by issuing the `no shutdown` command.

**Note:** Repeat steps 6.6.1.5.1 to 6.6.1.5.3 for all Raman amplifiers in your DUA.

##### 6.6.1.4.1 Determine Raman's group

Determine a group where the Raman amplifier is located by issuing the `show group` command. In the following example, the input Raman amplifier is located in Group 0 (named `redmond_to_everett`).

```
DUA# show group
Group 0 redmond_to_everett:

                                    Admin  Ctrl   Control   RxPow   TxPow  Module
Amplifier                 Role      State  Mode   Setpoint  (dBm)   (dBm)  State
```

```
----------------------  -------  -----  ----  ---------  ------  ------ ------
Input EDFA              Preamp   Up     APC    -4.5 dBm   -31.8     0.1 Up
Output EDFA             Booster  Up     APC     8.2 dBm   -19.8     0.1 Up
Input Raman             Preamp   Up     APC    40.0 mW    -28.6    16.0 Up

Management Interface Admin  Line   Type      IP Address
-------------------- ------ ------ --------- ---------------------------------
OSC 0                Down   Up     LAN

Module       Admin Line    Rate     RxPow       Ch   Transceiver  Last Line Chg
------------ ----- ------- -------- ----------- ---- -----------  -------------
OSC 0        Down  Up      100Mb/s    -12.5 dBm N/A  N/A          01d 03:16:36*
```

---

```
Group 1:
                                 Admin  Ctrl   Control   RxPow   TxPow  Module
Amplifier               Role     State  Mode   Setpoint  (dBm)   (dBm)  State
----------------------  -------  -----  ----  ---------  ------  ------ ------
Input EDFA              Preamp   Down   APC     6.3 dBm   -47.4   -40.0 LOS

Management Interface Admin  Line   Type      IP Address
-------------------- ------ ------ --------- ---------------------------------
OSC 1                Down   Down   LAN

Module       Admin Line    Rate     RxPow       Ch   Transceiver  Last Line Chg
------------ ----- ------- -------- ----------- ---- -----------  -------------
OSC 1        Down  Alarm   100Mb/s    -40.0 dBm N/A  N/A          01d 03:16:36*
```

---

```
Group 2:
                                 Admin  Ctrl   Control   RxPow   TxPow  Module
Amplifier               Role     State  Mode   Setpoint  (dBm)   (dBm)  State
----------------------  -------  -----  ----  ---------  ------  ------ ------
Output EDFA             Booster  Down   APC    12.0 dBm   -49.8   -40.0 LOS

Management Interface Admin  Line   Type      IP Address
-------------------- ------ ------ --------- ---------------------------------
OSC 2                Down   Down   LAN

Module       Admin Line    Rate     RxPow       Ch   Transceiver  Last Line Chg
------------ ----- ------- -------- ----------- ---- -----------  -------------
OSC 2        Down  Alarm   100Mb/s    -40.0 dBm N/A  N/A          01d 03:16:36*

DUA#
```

#### 6.6.1.4.2 Issue the “control manually- set” Command

For example, to configure the power setting for the Raman amplifier to 500mW:

```
DUA# configure
DUA CONF# group 0
DUA CONF-GROUP[redmond_to_everett]# amplifier input raman
DUA CONF-GROUP[redmond_to_everett input raman]# control manually-set power 500
DUA CONF-GROUP[redmond_to_everett input raman]# exit
```

Note that the Raman amplifier still needs to be turned on using the `no shutdown` command. Follow the Raman amplifier bring-up procedure to safely enable the Raman amplifier. For details on all amplifier commands, refer to the DarkStar *Command Reference*, available on the XKL website.

#### 6.6.1.4.3 Raman Amplifier Bring-Up Procedure

1. Make sure the Raman amplifier is turned off:

```
DUA CONF-GROUP[redmond_to_everett input raman]# shutdown
```

2. Connect the ingress and egress fiber to the DUA system. Before turning on the Raman, there should be a significant amount of fiber connected to the DUA ingress (input) fiber.

3. For eye-safe operation, the Raman amplifier requires input signal power be present before the Raman amplifier will turn on. Make sure there is signal power at the input of the DUA system. In this example, the Raman amplifier is seeing -10.5dBm of input power. If there is no signal power, the Raman amplifier will not turn on.

```
DUA CONF-GROUP[redmond_to_everett input raman]# do show group 0 amplifier input raman

Detailed information for Amplifier Group 0 redmond_to_everett Input Raman
 Module is administratively up
 Module Status
   State ................. Up
   Control mode ........... Manually-set (Power Control)
   Channel-count ..........    N/A
   Calculated Setpoint ....    N/A
   Applied Setpoint .......  500.0 mW
   Case temperature .......   37.7 C
   Shutdown due to LOS .... Disabled
 Pump 1 Status
   Pump bias current ......  871.7 mA (Up)
   Pump EOL bias current .. 1500.0 mA
   Pump temperature .......   25.1 C
 Pump 2 Status
   Pump bias current ......  961.0 mA (Up)
   Pump EOL bias current .. 1500.0 mA
   Pump temperature .......   25.2 C
 Signal Levels
   Input power ............  -10.5 dBm
   Total output power .....  500.0 mW (27.0 dBm)
   Signal output power ....  -10.5 dBm
   Signal gain ............   0.38 dB
 Alarms
   None
 Module Identification
   Role ................... Pre-amplifier
   Group Number ........... 0
   Group Name ............. redmond_to_everett
   APC Setpoint Max .......  500.0 mW

DUA CONF-GROUP[redmond_to_everett input raman]#
```

4. The Raman amplifier can be turned on. We recommend setting the power to a low power value first to make sure there are no problems with the fiber connections. In this example, the Raman amplifier is set to 150mW:

```
DUA CONF-GROUP[redmond_to_everett input raman]# control manually-set power 150
DUA CONF-GROUP[redmond_to_everett input raman]# no shutdown
```

5. Verify there are no alarms in the Raman amplifier (Alarms = None)

```
DUA CONF-GROUP[redmond_to_everett input raman]# do show group 0 amplifier input raman

Detailed information for Amplifier Group 0 redmond_to_everett Input Raman
 Module is administratively up
 Module Status
   State .................. Up
   Control mode ........... Manually-set (Power Control)
   Channel-count ..........    N/A
   Calculated Setpoint ....    N/A
   Applied Setpoint .......  150.0 mW
   Case temperature .......   44.5 C
   Shutdown due to LOS .... Disabled
 Pump 1 Status
   Pump bias current ......  302.8 mA (Up)
   Pump EOL bias current .. 1500.0 mA
   Pump temperature .......   24.9 C
 Pump 2 Status
   Pump bias current ......  332.0 mA (Up)
   Pump EOL bias current .. 1500.0 mA
   Pump temperature .......   24.8 C
 Signal Levels
   Input power ............  -17.4 dBm
   Total output power .....  150.1 mW (21.8 dBm)
   Signal output power ....  -17.4 dBm
   Signal gain ............   0.00 dB
 Alarms
   None
 Module Identification
   Role ................... Pre-amplifier
   Group Number ........... 0
   Group Name ............. redmond_to_everett
   APC Setpoint Max .......  500.0 mW

DUA CONF-GROUP[redmond_to_everett input raman]#
```

6. If there are no alarms, then set the Raman amplifier to the power level you require and verify there are still no alarms. In this example, the Raman amplifier is set to 500mW:

```
DUA CONF-GROUP[redmond_to_everett input raman]# control manually-set power 500

DUA CONF-GROUP[redmond_to_everett input raman]# do show group 0 amplifier input raman
```

```
Detailed information for Amplifier Group 0 redmond_to_everett Input Raman
 Module is administratively up
 Module Status
   State ................. Up
   Control mode ........... Manually-set (Power Control)
   Channel-count ..........    N/A
   Calculated Setpoint ....    N/A
   Applied Setpoint .......  500.0 mW
   Case temperature .......   37.7 C
   Shutdown due to LOS .... Disabled
 Pump 1 Status
   Pump bias current ......  871.7 mA (Up)
   Pump EOL bias current .. 1500.0 mA
   Pump temperature .......   25.1 C
 Pump 2 Status
   Pump bias current ......  961.0 mA (Up)
   Pump EOL bias current .. 1500.0 mA
   Pump temperature .......   25.2 C
 Signal Levels
   Input power ............  -10.5 dBm
   Total output power .....  500.0 mW (27.0 dBm)
   Signal output power ....  -10.5 dBm
   Signal gain ............   0.38 dB
 Alarms
   None
 Module Identification
   Role .................. Pre-amplifier
   Group Number ........... 0
   Group Name ............. redmond_to_everett
   APC Setpoint Max .......  500.0 mW

DUA CONF-GROUP[redmond_to_everett input raman]#
```

#### 6.6.1.5 EDFA

In your DUA system, a group may contains one or more EDFAs. The EDFA power setting depends on the number of DWDM channels in your system. The EDFA power settings will be automatically adjusted by DXMOS once you issue the `control automatic` command for the total number of DWDM channels, as shown in the following section.

##### 6.6.1.5.1 Issue the "control automatic" Command for individual amplifier configuration

Configure the power setting for EDFAs automatically. For example, if we want to use DUA Group 0 (named `redmond_to_everett`) to amplify twelve 400G channels coming from a Mux/Demux filter with 5 dB insertion loss, we can issue the `control automatic` command to achieve a target receive power of -10dBm:

On the Group 0's input EDFA, configure the `control automatic` with channel-count ***12*** and power ***-5***dBm per channel (to get the -10dBm for the transceiver's receiver power), and

On the Group 0's output EDFA, configure the `control automatic` with channel-count ***12*** and power ***3***dBm per channel (the default value), as follows:

`DUA CONF#` **group 0**

```
DUA CONF-GROUP[0]# name redmond_to_everett

DUA CONF-GROUP[redmond_to_everett]# amplifier input edfa
DUA CONF-GROUP[redmond_to_everett input edfa]# control automatic channel-count 12-5
DUA CONF-GROUP[redmond_to_everett input edfa]# exit

DUA CONF-GROUP[redmond_to_everett]# amplifier output edfa
DUA CONF-GROUP[redmond_to_everett output edfa]# control automatic channel-count 123
DUA CONF-GROUP[redmond_to_everett output edfa]# exit
```

For details on configuring EDFAs, refer to the DarkStar *Command Reference*, available on the XKL website.

**Important:** To ensure proper operation of the DUAs after connecting them, make sure that there is sufficient input power to the EDFAs. To do this, first determine the receive power (RxPow) level of the EDFAs by issuing a `show group` command, as shown in the following example. **Note:** The sample output below shows an amplifier with a loss of signal (LOS).

```
DUA# show group

Group 0 redmond_to_everett:
                                    Admin  Ctrl   Control   RxPow   TxPow  Module
Amplifier                Role       State  Mode   Setpoint  (dBm)   (dBm)  State
-----------------------  -------    -----  ----   ---------  ------  ------ ------
Input EDFA               Preamp     Down   APC     6.3 dBm   -50.0   -40.0 LOS
Output EDFA              Booster    Down   APC    14.3 dBm   -50.0   -40.0 LOS

Management Interface Admin  Line   Type       IP Address
-------------------- ------ ------ --------- ---------------------------------
OSC 0                Down   Down   LAN

Module       Admin Line    Rate     RxPow       Ch   Transceiver  Last Line Chg
------------ ----- ------- -------- ----------- ---- -----------  -------------
OSC 0        Down  Alarm   100Mb/s    -40.0 dBm N/A  N/A          00d 08:32:48*

OTDR OSC[0] (Group 0 [redmond_to_everett])
   Automatic Mode: . Enabled
   Last Result: .... Not Measured
```

Then compare that power level against the minimum (Min) and maximum (Max) values for "Total Operating Input Power (dBm)" in EDFA Optical Specifications.

# 6.7 SpectraPath

Addressed are the following system connections:

- Provisioner
- Illuminator
- Custom Waveplan Configuration

## 6.7.1 Provisioner

A SpectraPath Provisioner system can be connected to Muxponders, Transponders and other networking equipment via the front panel switch ports, as shown in Figure 6-20.

**FIGURE 6-20. SpectraPath Provisioner**

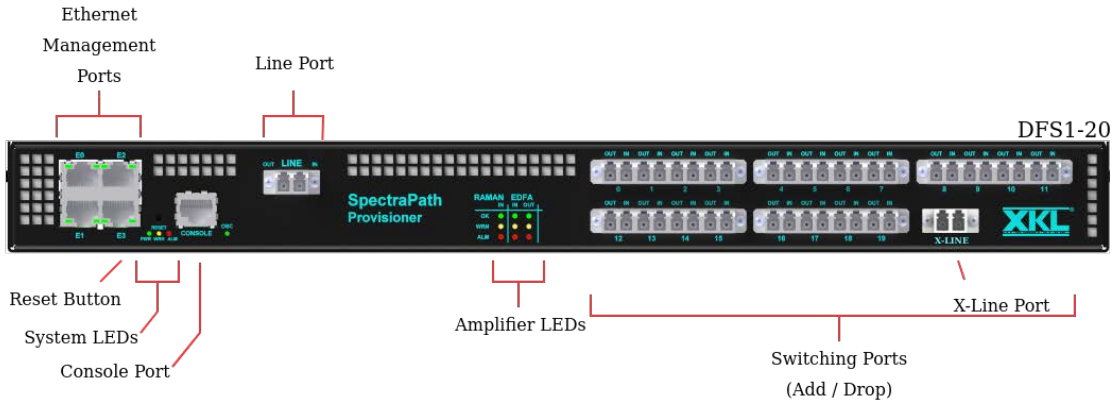

**FIGURE 6-21. SpectraPath Provisioner in Ring topology**

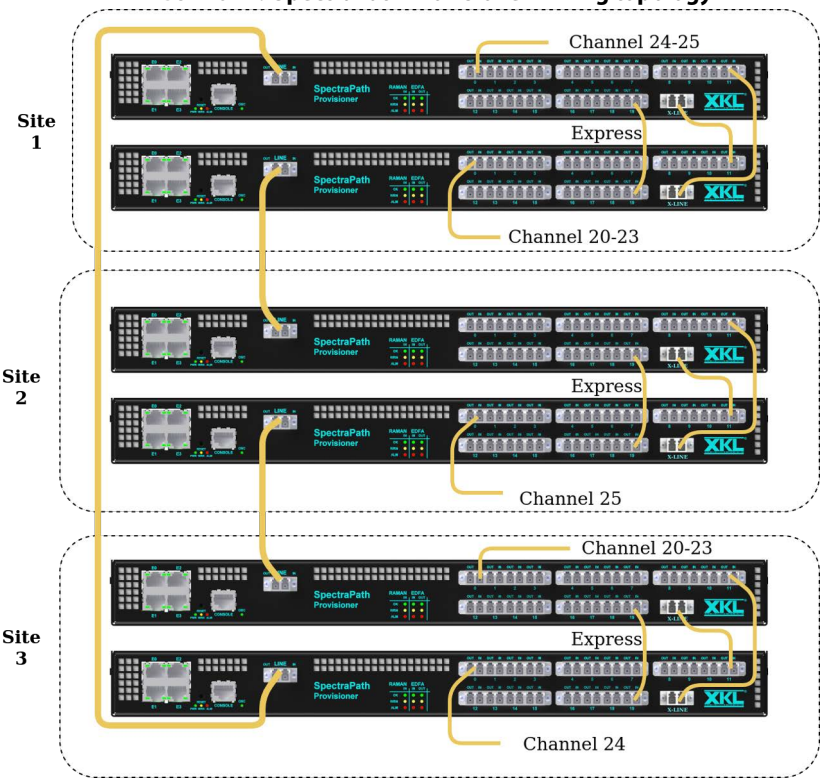


### 6.7.1.1 OSC

Your SpectraPath Provisioner system comes equipped with one OSC line transceiver. The following subsections detail how to determine the transceiver type and monitor the receive power levels.

#### 6.7.1.1.1 Determine OSC Transceiver Type

```
SpectraPath-Provisioner# show modules all

OSC 0     Down
  Description: .... OSC 0
  Tx: ............. OK                        Rx: .......... LOS
  State Changed: .. 09d 00:39:48*             Channel: ..... N/A
  Tx Laser: ....... Enabled                   Frequency: ... 198406 GHz
  Tx Power: ....... 0.5 dBm                   Wavelength: .. 1511.00 nm
  Rx Power: ....... -40.0 dBm                 Module Type: . SFP
  Loopback: ....... Not Supported             Temperature: . 35 C
  Encapsulation: .. 100Base-FX                Vendor: ...... OPLINK
  Last Cleared: ... 09d 00:39:25              Part No.: .... TRPE03HL2C00030G
  Link Downtime: .. 09d 00:39:48              Serial No.: .. Z191323QQ
  Maximum Reach: .. 80 km on SM               MFG Date: .... 190530
```

#### 6.7.1.1.2 Monitor the OSC Receive Power Level

Determine the OSC receive power (RxPow) level by issuing a `show module` command, as shown in the following example.

```
SpectraPath-Provisioner# show modules
 Interface    Admin  Line     Rate        RxPow      Ch  Transceiver  Last Line Chg
------------ ----- -------- -------- ----------- ---- -----------  -------------
OSC 0         Up    Alarm    100Mb/s    -40.0 dBm N/A  N/A          09d 00:44:35*
```

**Note:** You can also obtain the RxPow level with the `show modules all` command, as shown in the previous example (i.e., `Rx Power`). No optical connection to the Provisioner has been made yet, thus the RxPow for this OSC is "-40.0 dBm".

For the optical power levels for the OSC transceiver, refer to Recommended Transceiver Sensitivity Levels.

> **Caution:** Excessive input power can cause link performance degradation or component damage.

### 6.7.1.2 Bring-Up Procedure

Assuming Muxponders, Transponders or some other networking equipment has been connected to one of your Provisioner front panel switch ports, your system is read to be configured. The following optical components that are present in your Provisioner system must be configured and enabled in the following order:

From Line Input to Switch Port Output:
- Input Raman
- Input EDFA
- Input WSS

From Switch Port Input to Line Output:
- Output WSS
- Output EDFA

**Important:** Failure to configure the optical components in this order may result in incorrect amplifier settings.

If one of the front panel switch ports is being designated as an express port, as shown in Figure 6-21, the Provisioner systems must have jumper cables connected between each express port.

### 6.7.1.3 Raman

Your Provisioner may have been configured with a Raman amplifier. The Raman amplifier power setting needs to be provided by issuing the `control manually-set` command, as shown in the following section. Also the Raman amplifiers are disabled by default and must be enabled by the `no shutdown` command.

#### 6.7.1.3.1 Raman Amplifier Bring-Up Procedure

1. Make sure the Raman amplifier is turned off:

```
CONF-AMP[input raman]# shutdown
```

2. Connect the ingress and egress fiber to the SpectraPath system. Before turning on the Raman, there should be a significant amount of fiber connected to the SpectraPath ingress (input) fiber.

3. For eye-safe operation, input signal power should be present prior to turning on the Raman amplifier. Make sure there is signal power at the input of the SpectraPath system. In this example, the Raman amplifier is seeing -20.5 dBm of input power. If there is no signal power, the Raman will not turn on.

```
CONF-AMP[input raman]# do show amplifier input raman

Detailed information for Amplifier Input Raman (BKtel +700 mW)
  Module is administratively up
  Module Status
    State ................... Warn
    Control mode ............ Manually-set (Power Control)
    Channel-count ..........    N/A
    Calculated Setpoint ....    N/A
    Applied Setpoint .......  400.0 mW
    Case temperature .......   42.6 C
    Shutdown due to LOS .... Enabled
  Pump 1 Status
    Pump bias current ......    1.0 mA (Disabled)
    Pump EOL bias current .. 1250.0 mA
    Pump temperature .......   25.0 C
  Pump 2 Status
    Pump bias current ......    0.9 mA (Disabled)
    Pump EOL bias current .. 1350.0 mA
    Pump temperature .......   25.0 C
  Signal Levels
    Input power ............  -20.5 dBm
    Total output power .....  -40.0 dBm
    Signal output power ....  -40.0 dBm
    Signal gain ............    0.0 dB
  Alarms
    LOS/Loss of signal
  Module Identification
    Role .................... Pre-amplifier
    Path .................... West line input to switch port outputs
    APC Setpoint Max .......  700.0 mW
```

4. After verifying the input power, the Raman amplifier can be turned on. We recommend setting the power to a low power value first to make sure there are no problems with the fiber connections. In this example, the Raman amplifier is set to 150mW::

```
CONF-AMP[input raman]# control manually-set power 150
CONF-AMP[input raman]# no shutdown
```

5. Verify there are no alarms in the Raman amplifier (Alarms = None)

```
CONF-AMP[input raman]# do show amplifier input raman

Detailed information for Amplifier Input Raman (BKtel +700 mW)
  Module is administratively up
  Module Status
    State .................. Up
    Control mode ........... Manually-set (Power Control)
    Channel-count ..........    N/A
    Calculated Setpoint ....    N/A
    Applied Setpoint .......  150.0 mW
    Case temperature .......   42.6 C
    Shutdown due to LOS .... Enabled
  Pump 1 Status
    Pump bias current ......  295.7 mA (Up)
    Pump EOL bias current .. 1250.0 mA
    Pump temperature .......   25.0 C
  Pump 2 Status
    Pump bias current ......  323.4 mA (Up)
    Pump EOL bias current .. 1350.0 mA
    Pump temperature .......   25.0 C
  Signal Levels
    Input power ............  -17.3 dBm
    Total output power .....  150.0 mW (21.8 dBm)
    Signal output power ....  -17.3 dBm
    Signal gain ............   3.03 dB
  Alarms
    None
  Module Identification
    Role ................... Pre-amplifier
    Path ................... West line input to switch port outputs
    APC Setpoint Max .......  700.0 mW
```

6. If there are no alarms, then set the Raman amplifier to the power level you require and verify there are still no alarms:

```
CONF-AMP[input raman]# control manually-set power 600
CONF-AMP[input raman]# do show amplifier input raman

Detailed information for Amplifier Input Raman (BKtel +700 mW)
  Module is administratively up
  Module Status
    State .................. Up
    Control mode ........... Manually-set (Power Control)
    Channel-count ..........    N/A
    Calculated Setpoint ....    N/A
    Applied Setpoint .......  600.0 mW
    Case temperature .......   42.6 C
    Shutdown due to LOS .... Enabled
  Pump 1 Status
    Pump bias current ...... 1075.7 mA (Up)
    Pump EOL bias current .. 1250.0 mA
    Pump temperature .......   25.0 C
  Pump 2 Status
    Pump bias current ...... 1187.4 mA (Up)
```

```
  Pump EOL bias current .. 1350.0 mA
  Pump temperature .......   25.0 C
Signal Levels
  Input power ............   -8.8 dBm
  Total output power .....  600.0 mW (28.1 dBm)
  Signal output power ....   -8.8 dBm
  Signal gain ............  12.80 dB
Alarms
  None
Module Identification
  Role ................... Pre-amplifier
  Path ................... West line input to switch port outputs
  APC Setpoint Max .......  700.0 mW
```

#### 6.7.1.4 EDFA

Your SpectraPath Provisioner may have been configured with one or more EDFAs. The EDFA output power setting depends on the number of DWDM channels in your system. The EDFA power settings will be automatically adjusted by DXMOS once you issue the `control automatic` command for the total number of DWDM channels, as shown in the following section. Also, each EDFA is disabled by default and must be enabled by issuing the `no shutdown` command on each EDFA in the system.

##### 6.7.1.4.1 Issue the "control automatic" Command

Configure the power setting for all the EDFAs automatically. For example, in Figure 6-21, the top SpectraPath Provisioner at Site 1 shows 5 channels being added to the switch port of the system. In this case, the `control automatic` command would be as follows:

```
SpectraPath-Provisioner CONF# amplifier input edfa
SpectraPath-Provisioner CONF-AMP[input edfa]# control automatic channel-count 5
SpectraPath-Provisioner CONF-AMP[input edfa]# exit
SpectraPath-Provisioner CONF# amplifier output edfa
SpectraPath-Provisioner CONF-AMP[output edfa]# control automatic channel-count 5
SpectraPath-Provisioner CONF-AMP[output edfa]# exit
```

For details on configuring EDFAs, refer to the DarkStar *Command Reference*, available on the XKL website.

#### 6.7.1.5 WSS

Your SpectraPath Provisioner system is configured with two wavelength selective switches. The WSS can be used to dynamically control optical channel power levels and redirect light between the line port and the switch ports. A waveplan must be defined in order for light to pass between the front panel switch ports and the EDFAs. This can be done using the `band`, `attenuate`, and `connect` commands.

##### 6.7.1.5.1 Define a Waveplan

Configure the band settings for a single WSS path manually. For example, referring back to Figure 6-21, two 400G channels are added to the Provisioner's switch ports. The output WSS is configured with the `band` command as follows:

```
SP-Provisioner CONF# wss output
SP-Provisioner CONF-WSS[output]# band index 0 center frequency 192400 bandwidth 100
SP-Provisioner CONF-WSS[output]# band index 1 center frequency 192500 bandwidth 100
```

The first `band` command above allocates C-band spectrum 192350 GHz to 192450 GHz for channel 24. This allocation is assigned to band index 0. The second `band` command allocates C-band spectrum 192450 GHz to 192550 GHz for channel 25 and assigns it to index 1. Issuing a `do show wss output waveplan` command will display the defined bands, as shown in the following example.

```
WSS Output:
Band   Center       Width    |Atten   TxPwr   Thresh/Hys     Status      Port   Name
       (GHz)        (GHz)    |(dB)    (dBm)   LowAlrm(dBm)
-------------------------|-----------------------------------------------------
0      192400.000    100.000| 99.9   -49.1           N/A   N/A         None   N/A
1      192500.000    100.000| 99.9   -48.2           N/A   N/A         None   N/A
```

#### 6.7.1.5.2 Attenuate and connect bands

To finish configuring the output WSS on your Provisioner system, use the attenuate and connect commands to assign an attenuation and establish a front panel switch port connection to a band. As shown in Figure 6-21, band 0 is being added to port 0, and band 1 is being added to port 1. The commands are executed as follows:

```
SpectraPath-Provisioner CONF-WSS[output]# attenuate set 0.0 band 0 1
SpectraPath-Provisioner CONF-WSS[output]# connect port 0 band 0
SpectraPath-Provisioner CONF-WSS[output]# connect port 1 band 1
```

Issue the `do show wss output waveplan` command once again to verify that the waveplan has been updated:

```
WSS Output:
Band   Center       Width    |Atten   TxPwr   Thresh/Hys     Status      Port   Name
       (GHz)        (GHz)    |(dB)    (dBm)   LowAlrm(dBm)
-------------------------|-----------------------------------------------------
0      192400.000    100.000|  0.0   -11.4           N/A   N/A           0   Seattle
1      192500.000    100.000|  0.0   -11.5           N/A   N/A           1   Redmond
```

Repeat the steps above to setup a waveplan for the input WSS. For more details on WSS commands, refer to the DarkStar *Command Reference*, available on the XKL website.

#### 6.7.1.5.3 Using the X-Line

The X-Line allows two Provisioner systems to be connected together and create a CDC-F ROADM solution. Similar to the WSS input and output line configurations, the WSS x-input and x-output can also be configured to redirect bands from the front-panel switching ports to the X-Line. A band is exclusive to either the line or X-Line i.e., if a band is defined on the X-Line input, it can't be redefined on the line input.

**Important:** The X-Line is incapable of attenuation.

The following example defines Channel 25 in Figure 6-21 to use the X-Line for transmitting and receiving light between Site 1 and Site 2.

**Step 1: Configure the WSS X-Line on the top SpectraPath Provisioner system at Site 1.**

In order to direct channel 25 to the bottom SpectraPath Provisioner system, bands need to be created for this channel on the x-input and x-output lines.

```
SpectraPath-Provisioner_Top_Site1 CONF-WSS[x-input]# band index 25 center-
frequency 192500 bandwidth 100
SpectraPath-Provisioner_Top_Site1 CONF-WSS[x-input]# connect port 0 band 25
SpectraPath-Provisioner_Top_Site1 CONF-WSS[x-input]# do show wss x-input
waveplan

WSS X-Input:

Band   Center       Width    |Atten   RxPwr   Thresh/Hys     Status      Port   Name
       (GHz)        (GHz)    |(dB)    (dBm)   LowAlrm(dBm)
-------------------------|-----------------------------------------------------
  25   192500.000    100.000|  N/A   -24.0           N/A   N/A           0   Seattle

SpectraPath-Provisioner_Top_Site1 CONF-WSS[x-input]# exit
```

```
SpectraPath-Provisioner_Top_Site1 CONF# wss x-output
SpectraPath-Provisioner_Top_Site1 CONF-WSS[x-output]# band index 25 center-
frequency 192500 bandwidth 100
SpectraPath-Provisioner_Top_Site1 CONF-WSS[x-output]# connect port 0 band 25
SpectraPath-Provisioner_Top_Site1 CONF-WSS[x-output]# do show wss x-output
waveplan

WSS X-Output:

Band  Center      Width    |Atten  TxPwr  Thresh/Hys    Status     Port  Name
      (GHz)       (GHz)    |(dB)   (dBm)  LowAlrm(dBm)
-------------------------|-----------------------------------------------------
  25  192500.000   100.000|  N/A   -3.1           N/A  N/A           0  Seattle

SpectraPath-Provisioner_Top_Site1 CONF-WSS[x-output]#
```

**Step 2: Configure the WSS X-Line on the bottom SpectraPath Provisioner system at Site 1.**

Now that light has been directed from the X-Line on the Top SpectraPath Provisioner system at Site 1 to switch port 11 on the bottom SpectraPath Provisioner, the WSS line ports on the bottom Provisioner system is ready to be configured. The input and output WSS will be configured to transmit/receive light to/from Site 2.

```
SpectraPath-Provisioner_Bottom_Site1 CONF-WSS[input]# band index 25 center-
frequency 192500 bandwidth 100
SpectraPath-Provisioner_Bottom_Site1 CONF-WSS[input]# connect port 11 band 25
SpectraPath-Provisioner_Bottom_Site1 CONF-WSS[input]# do show wss input waveplan

WSS Input:

Band  Center      Width    |Atten  RxPwr  Thresh/Hys    Status     Port  Name
      (GHz)       (GHz)    |(dB)   (dBm)  LowAlrm(dBm)
-------------------------|-----------------------------------------------------
  25  192500.000   100.000|  0.0  -23.6           N/A  N/A          11  TOP_X-LN

SpectraPath-Provisioner_Bottom_Site1 CONF-WSS[output]# exit
SpectraPath-Provisioner_Bottom_Site1 CONF# wss output
SpectraPath-Provisioner_Bottom_Site1 CONF-WSS[output]# band index 25 center-
frequency 192500 bandwidth 100
SpectraPath-Provisioner_Bottom_Site1 CONF-WSS[output]# connect port 11 band 25
SpectraPath-Provisioner_Bottom_Site1 CONF-WSS[output]# do show wss output
waveplan

WSS Output:

Band  Center      Width    |Atten  TxPwr  Thresh/Hys    Status     Port  Name
      (GHz)       (GHz)    |(dB)   (dBm)  LowAlrm(dBm)
-------------------------|-----------------------------------------------------
  25  192500.000   100.000|  0.0   -4.5           N/A  N/A          11  TOP_X-LN
```

```
SpectraPath-Provisioner_Bottom_Site1 CONF-WSS[output]#
```

**Step 3: Configure the WSS Line on the top SpectraPath Provisioner system at Site 2.**

The steps for configuring the WSS on the top SpectraPath Provisioner system at Site 2 are similar to those described in Step 2. Switch port 11 is being used to direct light between the line on the top Provisioner system at Site 2 to the X-Line on the bottom Provisioner system at Site 2:

```
SpectraPath-Provisioner_Top_Site2 CONF-WSS[input]# band index 25 center-
frequency 192500 bandwidth 100
SpectraPath-Provisioner_Top_Site2 CONF-WSS[input]# connect port 11 band 25
SpectraPath-Provisioner_Top_Site2 CONF-WSS[input]# do show wss input waveplan

WSS Input:

Band  Center      Width    |Atten  RxPwr  Thresh/Hys    Status     Port  Name
      (GHz)       (GHz)    |(dB)   (dBm)  LowAlrm(dBm)
-------------------------|-----------------------------------------------------
  25  192500.000   100.000|  0.0   -7.5           N/A  N/A          11  BOT_X-LN

SpectraPath-Provisioner_Top_Site2 CONF-WSS[output]# exit
SpectraPath-Provisioner_Top_Site2 CONF# wss output
SpectraPath-Provisioner_Top_Site2 CONF-WSS[output]# band index 25 center-
frequency 192500 bandwidth 100
SpectraPath-Provisioner_Top_Site2 CONF-WSS[output]# connect port 11 band 25
SpectraPath-Provisioner_Top_Site2 CONF-WSS[output]# do show wss output waveplan

WSS Output:

Band  Center      Width    |Atten  TxPwr  Thresh/Hys    Status     Port  Name
      (GHz)       (GHz)    |(dB)   (dBm)  LowAlrm(dBm)
-------------------------|-----------------------------------------------------
  25  192500.000   100.000|  0.0  -25.6           N/A  N/A          11  BOT_X-LN

SpectraPath-Provisioner_Top_Site2 CONF-WSS[output]#
```

**Step 4: Configure the WSS X-Line on the bottom SpectraPath Provisioner system at Site 2.**

Finally, configure the bottom x-input and x-output WSSs for adding/dropping channel 25 at this system:

```
SpectraPath-Provisioner_Bottom_Site2 CONF-WSS[x-input]# band index 25 center-
frequency 192500 bandwidth 100
SpectraPath-Provisioner_Bottom_Site2 CONF-WSS[x-input]# connect port 0 band 25
SpectraPath-Provisioner_Bottom_Site2 CONF-WSS[x-input]# do show wss x-input
waveplan

WSS X-Input:

Band  Center      Width    |Atten  RxPwr  Thresh/Hys    Status     Port  Name
      (GHz)       (GHz)    |(dB)   (dBm)  LowAlrm(dBm)
-------------------------|-----------------------------------------------------
  25  192500.000   100.000|  N/A   -4.0           N/A  N/A           0  Bellevue
```

```
SpectraPath-Provisioner_Bottom_Site2 CONF-WSS[x-input]# exit
SpectraPath-Provisioner_Bottom_Site2 CONF# wss x-output
SpectraPath-Provisioner_Bottom_Site2 CONF-WSS[x-output]# band index 25 center-
frequency 192500 bandwidth 100
SpectraPath-Provisioner_Bottom_Site2 CONF-WSS[x-output]# connect port 0 band 25
SpectraPath-Provisioner_Bottom_Site2 CONF-WSS[x-output]# do show wss x-output
waveplan


WSS X-Output:

Band  Center      Width    |Atten  TxPwr  Thresh/Hys    Status     Port  Name
      (GHz)       (GHz)    |(dB)   (dBm)  LowAlrm(dBm)
-------------------------|-------------------------------------------------------
  25  192500.000   100.000|  N/A   -1.1           N/A  N/A           0  Bellevue

SpectraPath-Provisioner_Bottom_Site2 CONF-WSS[x-output]#
```

This completes the configuration of using the X-Line to send channel 25 between Site 1 and Site 2.

#### 6.7.1.5.4 Enabling WSS Protection

Bands can be protected on the SpectraPath Provisioner system. The Input Line/X-Line can be used as either a primary or backup line for bands that are passing through the WSS.

**Important:** A splitter and coupler must be used to make protection work with the SpectraPath Provisioner. The splitters and couplers would be connected to the switch ports of the SpectraPath Provisioner system.

The following example enables protection for channel 24 on the Top Provisioner system at Site 1 in Figure 6-21. An OCM threshold of -30.0 dBm has already been enabled for band 24.

To enable protection for channel 24, use the **protection enable** command at the input or x-input WSS configuration prompt:

```
SP-Provisioner_TOP_Site1 CONF-WSS[input]# protection enable x-input band 24

WSS Input protection enabled, active-line is the primary-line for band 24
SP-Provisioner_TOP_Site1 CONF-WSS[input]#
```

The protection waveplan can be displayed with the **do show wss protection waveplan** command:

```
SP-Provisioner_TOP_Site1 CONF-WSS[input]# do show wss protection waveplan

Protection Waveplan:
Input Waveplan Monitored Device..... OCM (Thresholds)
X-Input Waveplan Monitored Device.... OCM (Thresholds)

Band  Center      Width    |Prim  Actv  In RxPwr  X-In RxPwr  Port  Name
      (GHz)       (GHz)    |Line  Line  (dBm)     (dBm)
-------------------------|-------------------------------------------------------
  24  192400.000   100.000|  In    In      -8.2       -10.3     0  Seattle

SP-Provisioner_TOP_Site1 CONF-WSS[input]#
```

When the OCM low-alarm threshold is exceeded, a protection switch will occur, moving the band from the primary, input line to the backup, x-input line. Protection is disabled when this switch occurs.

```
SP-Provisioner_TOP_Site1 CONF-WSS[input]# do show wss protection waveplan
```

```
Protection Waveplan:
Input Waveplan Monitored Device..... OCM (Thresholds)
X-Input Waveplan Monitored Device.... OCM (Thresholds)

Band  Center      Width    |Prim  Actv  In RxPwr  X-In RxPwr  Port  Name
      (GHz)       (GHz)    |Line  Line  (dBm)     (dBm)
--------------------------|-----------------------------------------------------
  24  192400.000   100.000|  In  X-In     -35.7       -10.3     0  Seattle

SP-Provisioner_TOP_Site1 CONF-WSS[input]#
```

For more information on WSS protection commands. See the DarkStar Command Reference, available on the XKL website.

### 6.7.1.6 Connect the Provisioner Systems

This section will reiterate previous details and consists of the following steps:

1. Note the state of the Provisioner with no optical connections.
2. Connect the Provisioner line and switch ports.
3. Enable each EDFA.

The input power to an Output EDFA (i.e., Booster) comes from an attached system to the Provisioner's switch ports. The input power to an Input EDFA (i.e., Preamp) comes from the Line port, which is connected to another Provisioner system.

**Step 1: Note the state of the Provisioner with (as of yet) no optical connections.**

**a.** Before connecting the Line and Switch ports of the Provisioner system, issue the `do show amplifier` command at `SpectraPath-Provisioner_Top_Site1` and note the receive and transmit power levels (RxPow and TxPow respectively), as well as the Admin State and Module State. Also note that the Control Setpoint shows the EDFA target transmit power levels, which are values that are defined by DXMOS after the `control automatic` command was issued (as described in 6.7.1.4.1).

```
SpectraPath-Provisioner_Top_Site1 CONF# do show amplifier

                                  Admin  Ctrl   Control    RxPow    TxPow  Module
Amplifier                 Role    State  Mode   Setpoint   (dBm)    (dBm)  State
------------------------  ------- -----  ----  ---------  ------  ------ ------
Input EDFA                Preamp  Up     APC     5.0 dBm   -50.0   -40.0 LOS
Output EDFA               Booster Up     APC    17.1 dBm   -50.0   -40.0 LOS
```

In the output above, the receive power (RxPow) will be very low (around -40.0 dBm) and the transmit power (TxPow) will be off (i.e., -40.0 dBm).

**b.** Issue the do show modules command at `SpectraPath-Provisioner_Top_Site1` to determine the RxPow value for the OSC. Note that because the Provisioner is not connected to the Line port, the OSC RxPow is very low.

```
SpectraPath-Provisioner_Top_Site1 CONF# do show modules

 Interface   Admin  Line    Rate       RxPow     Ch     Status    Last Line Chg
------------ ----- ------- -------- ----------- ------- --------  -------------
OSC 0        Up    Alarm   100Mb/s    -40.0 dBm N/A     N/A       00d 01:11:54*
```

**Step 2: Connect the Provisioner Line and switch ports.**

**a.** As illustrated in Figure 6-21, connect the Line ports between the Provisioner systems at each site as follows:

- The bottom Provisioner at site 1 to the top Provisioner at site 2
- The bottom Provisioner at site 2 to the top Provisioner at site 3
- The bottom Provisioner at site 3 to the top Provisioner at site 1

**b.** Issue the `do show modules` command again at `SpectraPath-Provisioner_Top_Site1` and verify that the OSC RxPow has changed and the Line state of the OSC is "Up".

```
SpectraPath-Provisioner_Top_Site1 CONF# do show modules
 Interface   Admin  Line    Rate       RxPow     Ch     Status    Last Line Chg
------------ ----- ------- -------- ----------- ------- --------  -------------
OSC 0        Up    Up      100Mb/s    -10.1 dBm N/A     N/A        00d 00:00:16
```

**c.** As illustrated in Figure 6-21, connect switch port 19 between the top and bottom Provisioner systems at each site. Port 19 is being used to "Express" traffic between these systems for channels that aren't being added or dropped. For example, `SpectraPath-Provisioner_Bottom_Site1` is expressing channels 24 and 25 from Sites 2 and 3 to `SpectraPath-Provisioner_Top_Site1`. The waveplan for this system is as follows:

```
SpectraPath-Provisioner_Bottom_Site1 CONF# do show wss input waveplan

WSS Input:
Band  Center      Width   |Atten  OCM RxPwr  Port  Name
      (GHz)       (GHz)   |(dB)   (dBm)
--------------------------|-----------------------------------------------------
   0  192400.000   100.000|  0.0      -38.3    19  Express
   1  192500.000   100.000|  0.0      -45.3    19  Express
```

Make sure a waveplan is defined properly for each Provisioner's WSS to pass traffic. Refer to Section 6.7.1.5.1 for defining a waveplan.

**d.** Issue the do show amplifier command `SpectraPath-Provisioner_Top_Site1` and verify that the Output EDFA shows an RxPow value, meaning that the DWDM waves from the attached systems are multiplexed together and are being received by the Output EDFA.

```
SpectraPath-Provisioner_Top_Site1 CONF# do show amplifier
                                    Admin  Ctrl   Control   RxPow   TxPow  Module
Amplifier                Role       State  Mode   Setpoint  (dBm)   (dBm)  State
-----------------------  -------    -----  ----  ---------  ------  ------ ------
Input EDFA               Preamp     Down   APC     5.0 dBm   -50.0   -40.0 LOS
Output EDFA              Booster    Up     APC    17.1 dBm    -2.2    17.2 Up
```

The Input EDFA at `SpectraPath-Provisioner_Top_Site1`, on the other hand, still shows low RxPow value. This is because the Output EDFA for `SpectraPath-Provisioner_Bottom_Site3` in the network has not been enabled yet (The Output EDFA at Site 3 is generating the optical power that is received by the Input EDFA at Site 1).

Also, because we have not yet enabled the EDFAs, the TxPow still shows "-40.0" while the Admin State and the Module State are "Down" and "LOS" respectively.

**Step 3: Enable each EDFA.**

**Important:** Only begin this step after you have completed Steps 1 and 2.

Issue the no shutdown command from the associated prompt (i.e., "input edfa" or "output edfa"). Do this for each Provisioner system (i.e. `SpectraPath-Provisioner_Top_Site1`, `SpectraPath Provisioner_Bottom_Site1`, etc.).

**a.** Enable the Input EDFA:

```
SpectraPath-Provisioner_Top_Site1 CONF# amplifier input edfa

SpectraPath-Provisioner_Top_Site1 CONF-AMP[input edfa]# no shutdown
Amplifier Input EDFA: DXMOS enabled the EDFA
Amplifier Input EDFA: Pump is active
SpectraPath-Provisioner_Top_Site1 CONF-AMP[input edfa]# exit

SpectraPath-Provisioner_Top_Site1 CONF#
```

**b.** Enable the Output EDFA:

```
SpectraPath-Provisioner_Top_Site1 CONF# amplifier output edfa

SpectraPath-Provisioner_Top_Site1 CONF-AMP[output edfa]# no shutdown
Amplifier Output EDFA: DXMOS enabled the EDFA
Amplifier Output EDFA: Pump is active
SpectraPath-Provisioner_Top_Site1 CONF-AMP[output edfa]# exit

SpectraPath-Provisioner_Top_Site1 CONF#
```

**c.** After enabling the Input and Output EDFAs on all Provisionersystems, issue the do show amplifier command at SpectraPath-Provisioner_Top_Site1 and not the valid TxPow levels. Also verify that the Control Setpoint and the TxPow values for the Input and Output EDFA are approximately the same. If the Ctrl Mode is "AGC", then the TxPow value should be approximately the same as the RxPow plus the Control Setpoint values. The Admin State and Module State should be both "Up" as well.

```
SpectraPath-Provisioner_Top_Site1 CONF# do show amplifier
                                  Admin  Ctrl   Control    RxPow   TxPow  Module
Amplifier               Role      State  Mode   Setpoint   (dBm)   (dBm)  State
----------------------  -------   -----  ----  ---------  ------  ------ ------
Input EDFA              Preamp    Up     APC     5.0 dBm   -10.1     5.2 Up
Output EDFA             Booster   Up     APC    17.1 dBm    -2.2    17.2 Up
```

**d.** Lastly, compare that power level against the minimum (Min) and maximum (Max) values for "Total Operating Input Power (dBm)" in Table B-6, EDFA Optical Specifications.

## 6.7.2 Illuminator

A SpectraPath Illuminator System can be connected to muxponders and transponders for deeper network visibility.

**FIGURE 6-22. SpectraPath Illuminator**

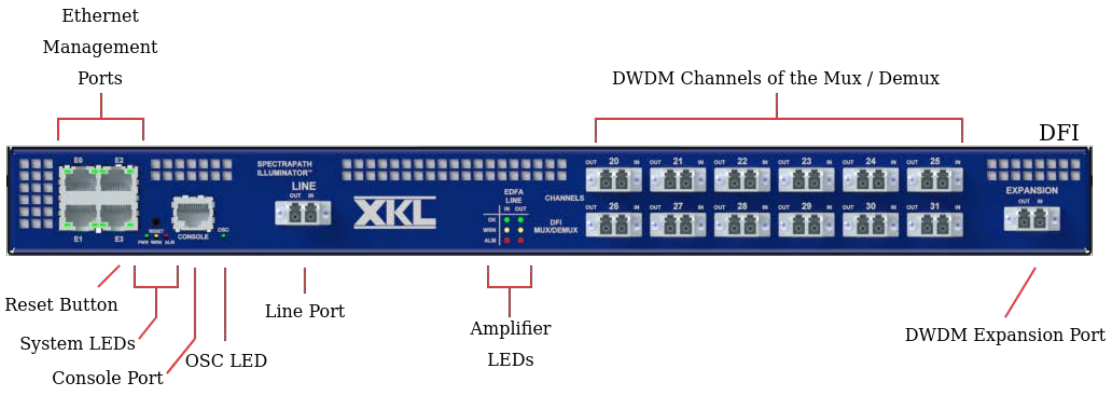


### 6.7.2.1 OSC

Your SpectraPath Illuminator system comes equipped with two OSC line transceivers. The following subsections detail how to determine the transceiver type and monitor the receiver power levels.

#### 6.7.2.1.1 Determine OSC Transceiver Type

```
SpectraPath-Illuminator# show modules all

OSC 0    Up
  Description: .... N/A
  Tx: ............. OK                    Rx: .......... LOS
  State Changed: .. 01d 23:17:31*         Channel: ..... N/A
  Tx Laser: ....... Enabled               Frequency: ... 198406 GHz
  Tx Power: ....... 2.4 dBm               Wavelength: .. 1511.00 nm
  Rx Power: ....... -40.0 dBm             Module Type: . SFP
  Loopback: ....... Not Supported         Temperature: . 28 C
  Encapsulation: .. 100Base-FX            Vendor: ...... SOURCEPHOTONICS
  Last Cleared: ... 01d 23:16:22          Part No.: .... SPC03XLR51CDA
  Link Downtime: .. 00d 00:00:00          Serial No.: .. A36T000524
  Maximum Reach: .. 150 km on SM          MFG Date: .... 10020588
```

#### 6.7.2.1.2 Monitor the OSC Receive Power Level

Determine the OSC receive power (RxPow) level by issuing a `show modules` command, as shown in the following example.

```
SpectraPath-Illuminator# show modules

 Interface   Admin  Line    Rate       RxPow      Ch     Status    Last Line Chg
------------ ----- ------- -------- ----------- ------- --------  -------------
OSC 0        Up    Down    100Mb/s    -40.0 dBm N/A     N/A       01d 23:22:08*
```

**Note:** You can also obtain the RxPow level with the `show modules all` command, as shown in the previous example (i.e., `Rx Power`). No optical connection to the Illuminator has been made yet, thus the RxPow for this OSC is "-40.0 dBm".

For the optical power levels for the OSC transceiver, refer to Recommended Transceiver Sensitivity Levels.

> **Caution:** Excessive input power can cause link performance degradation or component damage.

### 6.7.2.2 Raman

Your Illuminator may have been configured with a Raman amplifier. The Raman amplifier power setting needs to be provided by issuing the `control manually-set` command, as shown in the following section. Also, the Raman amplifier is disabled by default and must be enabled by issuing the `no shutdown` command.

#### 6.7.2.2.1 Issue the "control manually-set" command

Configure the power setting for the Raman amplifier to 650 mW, which is the maximum power setting:

`SpectraPath-Illuminator CONF-AMP[input raman]#` **control manually-set power** *650*

**Note:** The Raman amplifier still needs to turned on using the `no shutdown` command. Follow the Raman Amplifier Bring-Up Procedure to safely enable the Raman amplifier. For details on all amplifier commands, refer to the Darkstar Command Reference, available on the XKL website.

#### 6.7.2.2.2 Raman Amplifier Bring-Up Procedure

1. Make sure the Raman amplifier is turned off:

`CONF-AMP[input raman]#` **shutdown**

2. Connect the ingress and egress fiber to the DarkStar system. Before turning on the Raman, there should be at least 25km of fiber connected to the DarkStar ingress (input) fiber.

3. For eye-safe operation, the Raman amplifier requires input signal power be present before the Raman will turn on. Make sure there is signal power at the input of the DarkStar system. In this example, the Raman amplifier is seeing -20.5dBm of input power. If there is no signal power, the Raman will not turn on.

`CONF-AMP[input raman]#` **do show amplifier input raman**

```
Detailed information for Amplifier Input Raman
  Module is administratively down
  Module Status
    State ................. Warn
    Control mode ........... Manually-set (Power Control)
    Channel-count ..........    N/A
    Calculated Setpoint ....    N/A
    Applied Setpoint .......  650.00 mW
    Case temperature .......   45.7 C
    Shutdown due to LOS .... Enabled
  Pump 1 Status
    Pump bias current ......    1.0 mA (Disabled)
    Pump EOL bias current .. 1250.0 mA
    Pump temperature .......   24.8 C
  Pump 2 Status
    Pump bias current ......    0.9 mA (Disabled)
    Pump EOL bias current .. 1350.0 mA
    Pump temperature .......   24.8 C
  Signal Levels
```

```
    Input power ............  -20.5 dBm
    Total output power .....  -40.0 dBm
    Signal output power ....  -40.0 dBm
    Signal gain ............    0.0 dB
  Alarms
    AOP/Abnormal output power
  Module Identification
    Role ................... Pre-amplifier
    Path ................... Line input to Channel outputs
    APC Setpoint Max ....... 700.0 mW
```

4. Now that input signal is present, the Raman amplifier can be turned on. We recommend setting the power to a low power value first to make sure there are no problems with the fiber connections. In this example, the Raman amplifier is set to 150 mW:

```
CONF-AMP[input raman]# control manually-set power 150
CONF-AMP[input raman]# no shutdown
```

5. Verify there are no alarms in the Raman amplifier (Alarms = None)

```
CONF-AMP[input raman]# do show amplifier input raman

Detailed information for Amplifier Input Raman
  Module is administratively up
  Module Status
    State .................. Up
    Control mode ........... Manually-set (Power Control)
    Channel-count ..........    N/A
    Calculated Setpoint ....    N/A
    Applied Setpoint .......  150.00 mW
    Case temperature .......   40.8 C
    Shutdown due to LOS .... Enabled
  Pump 1 Status
    Pump bias current ......  295.7 mA ()
    Pump EOL bias current .. 1250.0 mA
    Pump temperature .......   24.7 C
  Pump 2 Status
    Pump bias current ......  323.6 mA (Disabled)
    Pump EOL bias current .. 1350.0 mA
    Pump temperature .......   24.6 C
  Signal Levels
    Input power ............  -17.3 dBm
    Total output power .....  150.0 mW (21.8 dBm)
    Signal output power ....  -17.3 dBm
    Signal gain ............   3.03 dB
  Alarms
    None
  Module Identification
    Role ................... Pre-amplifier
    Path ................... Line input to Channel outputs
    APC Setpoint Max ....... 700.0 mW
```

6. If there are no alarms, then set the Raman amplifier to the power level you require and verify there are still no alarms:

```
CONF-AMP[input raman]# control manually-set power 650
CONF-AMP[input raman]# do show amplifier input raman

Detailed information for Amplifier Input Raman
  Module is administratively up
  Module Status
    State ................. Up
    Control mode ........... Manually-set (Power Control)
    Channel-count ..........    N/A
    Calculated Setpoint ....    N/A
    Applied Setpoint .......  650.0 mW
    Case temperature .......   37.5 C
    Shutdown due to LOS .... Enabled
  Pump 1 Status
    Pump bias current ...... 1076.6 mA ()
    Pump EOL bias current .. 1250.0 mA
    Pump temperature .......   26.3 C
  Pump 2 Status
    Pump bias current ...... 1186.8 mA ()
    Pump EOL bias current .. 1350.0 mA
    Pump temperature .......   26.5 C
  Signal Levels
    Input power ............   -8.8 dBm
    Total output power .....  650.0 mW (28.1 dBm)
    Signal output power ....   -8.8 dBm
    Signal gain ............  12.80 dB
  Alarms
    None
  Module Identification
    Role ................... Pre-amplifier
    Path ................... Line input to Channel outputs
    APC Setpoint Max ....... 700.0 mW
```

### 6.7.2.3 EDFA

Your SpectraPath Illuminator may have been configured with one or more EDFAs. The EDFA output power setting depends on the number of DWDM channels in your system. The EDFA power settings will be automatically adjusted by DXMOS once you issue the `control automatic` command for the total number of DWDM channels, as shown in the following section. Also, each EDFA is disabled by default and must be enabled by issuing the `no shutdown` command on each EDFA in the system.

#### 6.7.2.3.1 Issue the "control automatic" Command

Configure the power setting for all EDFAs automatically. For example, in Figure 6-6 of the Transponders section, we show twelve 10G channels connected to the Illuminator. In that case, the `control automatic` command would be as follows:

```
SpectraPath-Illuminator CONF# amplifier input edfa
SpectraPath-Illuminator CONF-AMP[input edfa]# control automatic channel-count 12
SpectraPath-Illuminator CONF-AMP[input edfa]# exit
SpectraPath-Illuminator CONF# amplifier output edfa
SpectraPath-Illuminator CONF-AMP[output edfa]# control automatic channel-count 12
SpectraPath-Illuminator CONF-AMP[output edfa]# exit
```

```
SpectraPath-Illuminator CONF# amplifier input edfa

SpectraPath-Illuminator CONF-AMP[input edfa]# control automatic channel-count 12

SpectraPath-Illuminator CONF-AMP[input edfa]# exit

SpectraPath-Illuminator CONF# amplifier output edfa

SpectraPath-Illuminator CONF-AMP[output edfa]# control automatic channel-count 12

SpectraPath-Illuminator CONF-AMP[output edfa]# exit
```

For details on configuring EDFAs, refer to the DarkStar *Command Reference*, available on the XKL website.

#### 6.7.2.4 OCM

Your SpectraPath Illuminator system is configured with 4 optical channel monitoring ports. The OCM is used to monitor channel power levels at different locations in the Illuminator system. The Illuminator system is brought up with a default waveplan that matches the mux/demux filter in that system. However, the waveplan for a monitoring port can be changed using the `band` command.

##### 6.7.2.4.1 Adjusting a Waveplan

By default, the waveplan for each OCM port is aligned with the filter that is present in the system. For this Illuminator system, the filter follows the 100 GHz ITU grid.

```
SP-Illuminator CONF# ocm demux

SP-Illuminator CONF-OCM[demux]# do show ocm demux waveplan

OCM Demux:
  Default Waveplan.... 100-ITU
  Path................ Pre-amplifier output to Demux filter

Band  Center      Width    |Band Pwr  Thresh/Hys    Status
      (GHz)       (GHz)    |(dBm)     LowAlrm(dBm)
-------------------------|--------------------------------
   0  191400.000   100.000|   -36.4           N/A  N/A
   1  191500.000   100.000|   -34.0           N/A  N/A
   2  191600.000   100.000|   -33.3           N/A  N/A
   3  191700.000   100.000|   -33.6           N/A  N/A
   4  191800.000   100.000|   -32.5           N/A  N/A
   5  191900.000   100.000|   -32.0           N/A  N/A
   6  192000.000   100.000|   -31.4           N/A  N/A
   7  192100.000   100.000|   -31.5           N/A  N/A
   8  192200.000   100.000|   -32.6           N/A  N/A
   9  192300.000   100.000|   -33.3           N/A  N/A
  10  192400.000   100.000|   -30.2           N/A  N/A
  11  192500.000   100.000|   -32.8           N/A  N/A
  12  192600.000   100.000|    -6.8           N/A  N/A
  13  192700.000   100.000|    -6.2           N/A  N/A
  14  192800.000   100.000|    -6.4           N/A  N/A
  15  192900.000   100.000|    -6.9           N/A  N/A
```

```
 16  193000.000   100.000|    -6.3          N/A  N/A
 17  193100.000   100.000|    -5.5          N/A  N/A
 18  193200.000   100.000|    -6.6          N/A  N/A
 19  193300.000   100.000|    -5.9          N/A  N/A
 20  193400.000   100.000|    -6.6          N/A  N/A
 21  193500.000   100.000|    -5.9          N/A  N/A
 22  193600.000   100.000|    -5.1          N/A  N/A
 23  193700.000   100.000|    -5.8          N/A  N/A
 24  193800.000   100.000|   -30.6          N/A  N/A
 25  193900.000   100.000|   -31.6          N/A  N/A
 26  194000.000   100.000|   -31.6          N/A  N/A
 27  194100.000   100.000|   -31.9          N/A  N/A
 28  194200.000   100.000|   -31.1          N/A  N/A
 29  194300.000   100.000|   -32.2          N/A  N/A
 30  194400.000   100.000|   -33.5          N/A  N/A
 31  194500.000   100.000|   -33.6          N/A  N/A
 32  194600.000   100.000|   -34.7          N/A  N/A
 33  194700.000   100.000|   -35.7          N/A  N/A
 34  194800.000   100.000|   -35.5          N/A  N/A
 35  194900.000   100.000|   -37.0          N/A  N/A
 36  195000.000   100.000|   -35.8          N/A  N/A
 37  195100.000   100.000|   -36.3          N/A  N/A
 38  195200.000   100.000|   -37.5          N/A  N/A
 39  195300.000   100.000|   -40.0          N/A  N/A
 40  195400.000   100.000|   -36.6          N/A  N/A
 41  195500.000   100.000|   -37.9          N/A  N/A
 42  195600.000   100.000|   -38.5          N/A  N/A
 43  195700.000   100.000|   -38.4          N/A  N/A
 44  195800.000   100.000|   -36.5          N/A  N/A
 45  195900.000   100.000|   -38.1          N/A  N/A
 46  196000.000   100.000|   -39.6          N/A  N/A
 47  196100.000   100.000|   -43.0          N/A  N/A
```

If you wish to adjust the waveplan and define individual bands for each channel. execute the plan reset command followed by the band command.

```
SP-Illuminator CONF-OCM[demux]# plan reset

Resetting the waveplan will also clear threshold settings.

Are you sure? [yes/NO] yes

OCM Demux waveplan cleared.

SP-Illuminator CONF-OCM[demux]# band index 26 center-frequency 192600 bandwidth 100

SP-Illuminator CONF-OCM[demux]# band index 27 center-frequency 192700 bandwidth 100
```

The first band command above allocated C-band spectrum 192550 GHz to 192650 GHz for channel 26. This allocation is assigned to band index 26. The second band command allocated C-band spectrum 192650 GHz to 192750 GHz for channel 27 and assigns it to index 27. Issuing a `do show ocm demux waveplan` command will display the defined bands, as shown in the following example.

```
OCM Demux:
  Default Waveplan.... 100-ITU
  Path................ Pre-amplifier output to Demux filter

Band  Center      Width    |Band Pwr  Thresh/Hys    Status
      (GHz)       (GHz)    |(dBm)     LowAlrm(dBm)
-------------------------|--------------------------------
  26  192600.000   100.000|    -6.7           N/A  N/A
  27  192700.000   100.000|    -6.3           N/A  N/A
```

#### 6.7.2.4.2 Assign thresholds

Thresholds can be assigned to bands for generating events when its setpoint is exceeded. Low-alarm is the only supported threshold alert type. The following example assigns a threshold to band 26 and 27.

`SP-Illuminator CONF-OCM[demux]#` **threshold low-alarm** *-30.0* **band** *26 27*

`SP-Illuminator CONF-OCM[demux]#` **do show ocm demux waveplan**

```
OCM Demux:
  Default Waveplan.... 100-ITU
  Path................ Pre-amplifier output to Demux filter

Band  Center      Width    |Band Pwr  Thresh/Hys    Status
      (GHz)       (GHz)    |(dBm)     LowAlrm(dBm)
-------------------------|--------------------------------
  26  192600.000   100.000|    -6.7     -30.0/2.0  OK
  27  192700.000   100.000|    -6.3     -30.0/2.0  OK
```

If the band power falls below the threshold setpoint, the Status will change to "Low Alarm" and events will be generated.

`SP-Illuminator CONF-OCM[demux]#` **do show ocm demux waveplan**

```
OCM Demux:
  Default Waveplan.... 100-ITU
  Path................ Pre-amplifier output to Demux filter

Band  Center      Width    |Band Pwr  Thresh/Hys    Status
      (GHz)       (GHz)    |(dBm)     LowAlrm(dBm)
-------------------------|--------------------------------
  26  192600.000   100.000|   -39.2     -30.0/2.0  Low Alarm
  27  192700.000   100.000|    -6.3     -30.0/2.0  OK
```

For more details on the `threshold` command, refer to the DarkStar Command Reference, available on the XKL website.

### 6.7.2.5 Connect the Illuminator Systems

This section consists of the following steps:

1. Note the state of the Illuminator with no optical connections.
2. Connect the Illuminator line and mux/demux ports.
3. Enable each EDFA.

The input power to an Output EDFA (i.e., Booster) comes from the attached transponder system. The input power to an Input EDFA (i.e., Preamp) comes from the Line A or Line B ports, which are connected to the other Illuminator system.

**Step 1: Note the state of the Illuminator with (as of yet) no optical connections.**

**a.** Before connecting the Illuminator system to the Line ports or to a Transponder system, issue the `do show amplifier` command at `SP-Illuminator_Location1` and note the receive and transmit power levels (RxPow and TxPow respectively), as well as the Admin state and Module State. Also note that the Control Setpoint shows the EDFA target transmit-power levels, which are values that are defined by DXMOS after the `control automatic` command was issued.

```
SP-Illuminator_Location1 CONF# do show amplifier

                                  Admin  Ctrl   Control    RxPow   TxPow  Module
Amplifier                Role     State  Mode   Setpoint   (dBm)   (dBm)  State
-----------------------  -------  -----  ----  ---------  ------  ------ ------
Input EDFA               Preamp   Down   APC     5.7 dBm   -36.5   -40.0 Warn
Output EDFA              Booster  Down   APC    20.0 dBm   -47.4   -40.0 Warn
```

In the output above, the receive power (RxPow) will be very low (around -40.0 dBm) and the transmit power (TxPow) will be off (i.e., -40.0).

**b.** Issue the `do show modules` command at `SP-Illuminator_Location1` to determine the RxPow values for the OSCs. Note that because the DMD-A is not connected to the Line port, the OSC RxPow is very low (<-42.0dBm).

```
SP-Illuminator_Location1 CONF# do show modules

 Interface   Admin  Line    Rate       RxPow     Ch     Status    Last Line Chg
------------ ----- ------- -------- ----------- ------- --------  -------------
OSC West     Up    Alarm   100Mb/s    -10.5 dBm N/A     N/A       00d 00:48:20*
OSC East     Up    Alarm   100Mb/s    -13.5 dBm N/A     N/A       00d 00:48:20*
```

**Step 2: Connect the Illuminator line and mux/demux ports.**

**a.** As illustrated in Figure 6-13, connect the Line ports of the Illuminator at `SP-Illuminator_Location1` to the Line ports of the Illuminator at `SP-Illuminator_Location2`. Note that only the OSC is enabled by default in the Illuminator system; the EDFAs are disabled.

**b.** Issue the `do show modules` command again at `SP-Illuminator_Location1` and verify that the OSC RxPow has changed and the line state of the OSCs is "Up".

```
SP-Illuminator_Location1 CONF# do show modules

 Interface   Admin  Line    Rate       RxPow     Ch     Status    Last Line Chg
------------ ----- ------- -------- ----------- ------- --------  -------------
OSC West     Up    Up      100Mb/s    -10.5 dBm N/A     N/A       00d 00:28:13*
OSC East     Up    Up      100Mb/s    -13.5 dBm N/A     N/A       00d 00:28:13*
```

**c.** Connect the Illuminator mux/demux ports to the DarkStar transponder system, as illustrated in Figure 6-13.

**Note:** See XKL sales for specific DMD cables used in your application.

**d.** Issue the `do show amplifier` command and verify that the Output EDFA shows an RxPow value, meaning that the DWDM waves from the transponder are multiplexed together and are being receive by the Output EDFA.

```
SP-Illuminator_Location1 CONF# do show amplifier

                                  Admin  Ctrl   Control    RxPow   TxPow  Module
```

```
Amplifier                Role     State  Mode   Setpoint  (dBm)   (dBm)  State
-----------------------  -------  -----  ----  ---------  ------  ------ ------
Input EDFA               Preamp   Down   APC     5.7 dBm   -36.5   -40.0 Warn
Output EDFA              Booster  Down   APC    20.0 dBm     2.8   -40.0 Warn
```

The Input EDFA at `SP-Illuminator_Location1` on the other hand, still shows a low RxPow value. This is because the Output EDFA for `SP-Illuminator_Location2` in the network has not been enabled yet. (The Output EDFA at Location 2 is generating the optical power that is received by the Input EDFA of Location 1.)

Also, because we have not yet enabled the EDFAs, the TxPow still shows "-40.0", while the Admin State and Module still show "Down" and "Warn" respectively.

**Step 3: Enable each EDFA.**

**Important:** Only begin this step after you have completed Steps 1 and 2.

Issue the `no shutdown` command from the associated prompt (i.e., "input edfa" or "output edfa"). Do this for each Illuminator system (i.e., `SP-Illuminator_Location1` and `SP-Illuminator_Location2`).

**a.** Enable the Input EDFA:

```
SP-Illuminator_Location1 CONF# amplifier input edfa

SP-Illuminator_Location1 CONF[input edfa]# no shutdown

Amplifier Input EDFA: DXMOS enabled the EDFA
Amplifier Input EDFA: Pump is active
SP-Illuminator_Location1 CONF-AMP[input edfa]# exit

SP-Illuminator_Location1 CONF#
```

**b.** Enable the Output EDFA:

```
SP-Illuminator_Location1 CONF# amplifier output edfa

SP-Illuminator_Location1 CONF-AMP[output edfa]# no shutdown

Amplifier Output EDFA: DXMOS enabled the EDFA
Amplifier Output EDFA: Pump is active
SP-Illuminator_Location1 CONF-AMP[output edfa]# exit

SP-Illuminator_Location1 CONF#
```

**c.** After enabling the Input and Output EDFAs on both Illuminator systems, issue the do show amplifier command `SP-Illuminator_Location1` and note the valid TxPow levels. Also verify that the Control Setpoint and TxPow values for the Input EDFA are approximately the same. Likewise, verify that the Control Setpoint and TxPow values for the Output EDFA are approximately the same. The Admin State and Module State should be both "Up" as well.

```
SP-Illuminator_Location1 CONF# do show amplifier

                                 Admin  Ctrl   Control   RxPow   TxPow  Module
Amplifier                Role    State  Mode   Setpoint  (dBm)   (dBm)  State
-----------------------  -------  -----  ----  ---------  ------  ------ ------
Input EDFA               Preamp   Up     APC     5.7 dBm    -9.9     5.6 Up
Output EDFA              Booster  Up     APC    20.0 dBm     2.8    20.0 Up
```

**d.** Lastly, compare that power level against the minimum (Min) and maximum (Max) values for "Total Operating Input Power (dBm)" in Table B-6, EDFA Optical Specifications.

### 6.7.3 Custom Waveplan Configuration

Custom Waveplans can be used to maintain waveplan settings and be applied on to multiple SpectraPath devices, like the WSS and OCM. It is generally expected that these devices will have the same waveplan. Creating and applying these custom waveplans provides a more convenient way of configuring your SpectraPath system.

The following example refers to Figure 6-21 and details the configuration of custom waveplan 0 on the bottom Provisioner system at Site 1. First, the bands that are expected to be added/dropped at this system are added to the custom waveplan:

```
SpectraPath-Provisioner_Bottom_Site1 CONF-WP[0]# band index 20 center-frequency
192000 bandwidth 100

SpectraPath-Provisioner_Bottom_Site1 CONF-WP[0]# band index 21 center-frequency
192100 bandwidth 100

SpectraPath-Provisioner_Bottom_Site1 CONF-WP[0]# band index 22 center-frequency
192200 bandwidth 100

SpectraPath-Provisioner_Bottom_Site1 CONF-WP[0]# band index 23 center-frequency
192300 bandwidth 100
```

Next, commit the waveplan to the input and output WSS devices:

```
SpectraPath-Provisioner_Bottom_Site1 CONF-WP[0]# commit wss input
Committing will save your changes to the waveplan.
Are you sure? [yes/NO] yes
Override the WSS waveplan.
Are you sure? [yes/NO] yes

Waveplan 0 Committed to WSS Input waveplan.
SpectraPath-Provisioner_Bottom_Site1 CONF-WP[0]# commit wss output
No waveplan changes to commit.
Override the WSS waveplan.
Are you sure? [yes/NO] yes

Waveplan 0 Committed to WSS Output waveplan.
SpectraPath-Provisioner_Bottom_Site1 CONF-WP[0]#
```

Now, attenuate and connect the bands to switch port 0 at each WSS location.

```
SpectraPath-Provisioner_Bottom_Site1 CONF-WSS[input]# do show wss input waveplan

WSS Input:
Band  Center      Width    |Atten  RxPwr  Thresh/Hys    Threshold  Port  Name
      (GHz)       (GHz)    |(dB)   (dBm)  LowAlrm(dBm)  Status
-------------------------|-------------------------------------------------
  20  192000.000   100.000| 99.9  -33.5          N/A  N/A        None  N/A
  21  192100.000   100.000| 99.9  -32.8          N/A  N/A        None  N/A
  22  192200.000   100.000| 99.9  -33.2          N/A  N/A        None  N/A
  23  192300.000   100.000| 99.9  -34.4          N/A  N/A        None  N/A
```

```
SpectraPath-Provisioner_Bottom_Site1 CONF-WSS[input]# attenuate set 0 band 20 23

WSS Input attenuation set to 0.0 dB for bands 20 to 23
SpectraPath-Provisioner_Bottom_Site1 CONF-WSS[input]# connect port 0 band 20 23

WSS Input connected switch port 0 (N/A) for bands 20 to 23
SpectraPath-Provisioner_Bottom_Site1 CONF-WSS[input]# do show wss input waveplan

WSS Input:
Band  Center      Width    |Atten  RxPwr  Thresh/Hys    Threshold  Port  Name
      (GHz)       (GHz)    |(dB)   (dBm)  LowAlrm(dBm)  Status
-------------------------|-------------------------------------------------
  20  192000.000   100.000|  0.0   -2.5           N/A  N/A           0  N/A
  21  192100.000   100.000|  0.0   -2.8           N/A  N/A           0  N/A
  22  192200.000   100.000|  0.0   -2.2           N/A  N/A           0  N/A
  23  192300.000   100.000|  0.0   -3.4           N/A  N/A           0  N/A

SpectraPath-Provisioner_Bottom_Site1 CONF-WSS[input]#
```

Repeat this step on the output WSS and that concludes adding/dropping channels 20-23 at switch port 0 on the bottom SpectraPath Provisioner system at Site 1.

# 6.8 Managing Amplifiers

```
shutdown, no shutdown
```

If your system includes one or more optical amplifiers, you can control amplification remotely. The first part of this section provides examples of how to verify the receive power (RxPow) levels of line transceivers (i.e., DWDM), as well as how to manually disable or enable an optical amplifier (such as an EDFA). The last part of the section illustrates a manual EDFA-configuration workflow, followed by examples of manual EDFA-configuration commands.

**Note:** In muxponder systems, amplifiers are automatically enabled and set, so there is no need to adjust the amplifier settings.

The following sample output in this section comes from the DQT10 and DMD-A.

## 6.8.1 Verify Amplifier Status

From the configuration mode (CONF#), issue the `show amplifier` summary (or `show amplifier all`) command to display amplifier status.

`localhost#` **configure**

`localhost CONF#` **hostname** *DMD-A_System*

`DMD-A_System CONF#` **do show amplifier** summary

```
                                  Admin  Ctrl   Control   RxPow   TxPow   Module
Amplifier               Role      State  Mode   Setpoint  (dBm)   (dBm)   State
----------------------  -------  -----  ----  ---------  ------  ------  -------
Input EDFA               Preamp   Down  APC  5.8dBm   -4.3    -40.0    Warn
Output EDFA              Booster  Down  APC  20.0dBm   2.8    -40.0    Warn
```

`DMD-A_System CONF#` **exit**

`DMD-A_System#`

### 6.8.2 Verify EDFA Settings

The following example shows a 12-channel DarkStar DQT10 transponder with an attached DMD-A (supplied with EDFA). If you do not have DQT10, review the receive power (RxPow) levels for your particular system's line transceivers (i.e., waves).

**1.** From the DQT10 command line, issue a `show modules summary` command to verify RxPow levels of the line transceivers (waves 0-11).

```
DQT10_System# show modules summary

 Interface  Admin  Line     Rate       RxPow     Ch  Transceiver Last Line Chg
---------- ----- -------- -------- ----------- ---- ----------- -------------
Client 0
 Lane 0     Up    Down     10Gb/s    <-40.0 dBm N/A  OK          00d 19:57:55
 Lane 1     Up    Down     10Gb/s    <-40.0 dBm N/A  OK          00d 19:57:55
 Lane 2     Up    Down     10Gb/s    <-40.0 dBm N/A  OK          00d 19:57:55
 Lane 3     Up    Down     10Gb/s    <-40.0 dBm N/A  OK          00d 19:57:55
Client 1
 Lane 0     Up    Down     10Gb/s    <-40.0 dBm N/A  OK          00d 19:57:55
 Lane 1     Up    Down     10Gb/s    <-40.0 dBm N/A  OK          00d 19:57:55
 Lane 2     Up    Down     10Gb/s    <-40.0 dBm N/A  OK          00d 19:57:55
 Lane 3     Up    Down     10Gb/s    <-40.0 dBm N/A  OK          00d 19:57:55
Client 2
 Lane 0     Up    Down     10Gb/s    <-40.0 dBm N/A  OK          00d 19:57:55
 Lane 1     Up    Down     10Gb/s    <-40.0 dBm N/A  OK          00d 19:57:55
 Lane 2     Up    Down     10Gb/s    <-40.0 dBm N/A  OK          00d 19:57:55
 Lane 3     Up    Down     10Gb/s    <-40.0 dBm N/A  OK          00d 19:57:55
Wave 0      Up    Up       10Gb/s     -10.4 dBm 20.0 OK          00d 19:57:55
Wave 1      Up    Up       10Gb/s      -9.9 dBm 21.0 OK          00d 19:57:55
Wave 2      Up    Up       10Gb/s     -11.2 dBm 22.0 OK          00d 19:57:55
Wave 3      Up    Up       10Gb/s      -9.8 dBm 23.0 OK          00d 19:57:55

Wave 4      Up    Up       10Gb/s     -10.0 dBm 24.0 OK          00d 19:57:55
Wave 5      Up    Up       10Gb/s     -10.6 dBm 25.0 OK          00d 19:57:55
Wave 6      Up    Up       10Gb/s     -12.6 dBm 26.0 OK          00d 19:57:55
Wave 7      Up    Up       10Gb/s     -12.1 dBm 27.0 OK          00d 19:57:55
Wave 8      Up    Up       10Gb/s     -10.6 dBm 28.0 OK          00d 19:57:55
Wave 9      Up    Up       10Gb/s     -11.8 dBm 29.0 OK          00d 19:57:55
Wave 10     Up    Up       10Gb/s     -11.3 dBm 30.0 OK          00d 19:57:55
Wave 11     Up    Up       10Gb/s     -11.0 dBm 31.0 OK          00d 19:57:55
OSC 0       Up    Up       N/A        -19.0 dBm N/A  N/A         N/A
```

**2.** From the DMD-A command line, disable the EDFA by issuing the `shutdown` command from the following configuration mode (in this example, `input`).

```
DMD-A_System# configure
DMD-A_System CONF# amplifier input edfa
DMD-A_System CONF-AMP[input edfa]# shutdown
Amplifier Input EDFA: DXMOS disabled the EDFA
Amplifier Input EDFA: Alarm: Abnormal output power
Amplifier Input EDFA: State change: Warn
Amplifier Input EDFA: Pump is off
DMD-A_System CONF-AMP[input edfa]# exit

DMD-A_System CONF# exit
DMD-A_System#
```

**3.** From the DQT10 command line, issue the `show modules summary` command again. In the following output, note how the EDFA `shutdown` command has resulted in little or no receive power (RxPow) for the line transceivers (waves 0-11). Refer to Recommended Transceiver Sensitivity Levels for the XKL-recommended RxPow values.

```
DQT10_System# show modules summary

 Interface  Admin  Line     Rate       RxPow      Ch  Transceiver Last Line Chg
---------- ----- -------- -------- ----------- ---- ----------- -------------
Client 0
 Lane 0     Up    Down     10Gb/s    <-40.0 dBm N/A  OK          00d 19:58:33
 Lane 1     Up    Down     10Gb/s    <-40.0 dBm N/A  OK          00d 19:58:33
 Lane 2     Up    Down     10Gb/s    <-40.0 dBm N/A  OK          00d 19:58:33
 Lane 3     Up    Down     10Gb/s    <-40.0 dBm N/A  OK          00d 19:58:33
Client 1
 Lane 0     Up    Down     10Gb/s    <-40.0 dBm N/A  OK          00d 19:58:33
 Lane 1     Up    Down     10Gb/s    <-40.0 dBm N/A  OK          00d 19:58:33
 Lane 2     Up    Down     10Gb/s    <-40.0 dBm N/A  OK          00d 19:58:33
 Lane 3     Up    Down     10Gb/s    <-40.0 dBm N/A  OK          00d 19:58:33
Client 2
 Lane 0     Up    Down     10Gb/s    <-40.0 dBm N/A  OK          00d 19:58:33
 Lane 1     Up    Down     10Gb/s    <-40.0 dBm N/A  OK          00d 19:58:33
 Lane 2     Up    Down     10Gb/s    <-40.0 dBm N/A  OK          00d 19:58:33
 Lane 3     Up    Down     10Gb/s    <-40.0 dBm N/A  OK          00d 19:58:33
Wave 0      Up    Down     10Gb/s    <-40.0 dBm 20.0 Alarm       00d 19:58:33
Wave 1      Up    Down     10Gb/s    ~-37.0 dBm 21.0 Alarm       00d 19:58:33
Wave 2      Up    Down     10Gb/s    <-40.0 dBm 22.0 Alarm       00d 19:58:33
Wave 3      Up    Down     10Gb/s    <-40.0 dBm 23.0 Alarm       00d 19:58:33
Wave 4      Up    Down     10Gb/s    ~-35.2 dBm 24.0 Alarm       00d 19:58:33
Wave 5      Up    Down     10Gb/s    ~-40.0 dBm 25.0 Alarm       00d 19:58:33

Wave 6      Up    Down     10Gb/s    <-40.0 dBm 26.0 Alarm       00d 19:58:33
Wave 7      Up    Down     10Gb/s    ~-37.0 dBm 27.0 Alarm       00d 19:58:33
Wave 8      Up    Down     10Gb/s    <-40.0 dBm 28.0 Alarm       00d 19:58:33
Wave 9      Up    Down     10Gb/s    <-40.0 dBm 29.0 Alarm       00d 19:58:33
Wave 10     Up    Down     10Gb/s    <-40.0 dBm 30.0 Alarm       00d 19:58:33
Wave 11     Up    Down     10Gb/s    ~-35.2 dBm 31.0 Alarm       00d 19:58:33
OSC 0       Up    Up       N/A        -19.0 dBm N/A  N/A         N/A
```

**4.** From the DMD-A command line, enable the EDFA by issuing the `no shutdown` command. This will result in valid RxPow values of the line transceivers (waves 0-11).

```
DMD-A_System# configure
DMD-A_System CONF# amplifier input edfa
DMD-A_System CONF-AMP[input edfa]# no shutdown

Amplifier Input EDFA: DXMOS enabled the EDFA
Amplifier Input EDFA: Pump is active
DMD-A_System CONF-AMP[input edfa]# Amplifier Input EDFA:
 Alarm resolved: Abnormal output power
Amplifier Input EDFA: State change: Up

DMD-A_System CONF-AMP[input edfa]# exit

DMD-A_System CONF# exit
DMD-A_System#
```

**5.** Lastly, from the DQT10 command line, issue a `show modules summary` command to verify that there is once again RxPow in the line transceivers (waves 0-11).

```
DQT10_System# show modules summary

 Interface  Admin  Line     Rate       RxPow     Ch  Transceiver Last Line Chg
---------- ----- -------- -------- ----------- ---- ----------- -------------
Client 0
 Lane 0     Up    Down     10Gb/s    <-40.0 dBm N/A  OK          00d 19:59:10
 Lane 1     Up    Down     10Gb/s    <-40.0 dBm N/A  OK          00d 19:59:10
 Lane 2     Up    Down     10Gb/s    <-40.0 dBm N/A  OK          00d 19:59:10
 Lane 3     Up    Down     10Gb/s    <-40.0 dBm N/A  OK          00d 19:59:10
Client 1
 Lane 0     Up    Down     10Gb/s    <-40.0 dBm N/A  OK          00d 19:59:10
 Lane 1     Up    Down     10Gb/s    <-40.0 dBm N/A  OK          00d 19:59:10
 Lane 2     Up    Down     10Gb/s    <-40.0 dBm N/A  OK          00d 19:59:10
 Lane 3     Up    Down     10Gb/s    <-40.0 dBm N/A  OK          00d 19:59:10
Client 2
 Lane 0     Up    Down     10Gb/s    <-40.0 dBm N/A  OK          00d 19:59:10
 Lane 1     Up    Down     10Gb/s    <-40.0 dBm N/A  OK          00d 19:59:10
 Lane 2     Up    Down     10Gb/s    <-40.0 dBm N/A  OK          00d 19:59:10
 Lane 3     Up    Down     10Gb/s    <-40.0 dBm N/A  OK          00d 19:59:10
Wave 0      Up    Up       10Gb/s     -10.5 dBm 20.0 OK          00d 19:59:10
Wave 1      Up    Up       10Gb/s      -9.9 dBm 21.0 OK          00d 19:59:10
Wave 2      Up    Up       10Gb/s     -11.2 dBm 22.0 OK          00d 19:59:10
Wave 3      Up    Up       10Gb/s      -9.7 dBm 23.0 OK          00d 19:59:10
Wave 4      Up    Up       10Gb/s     -10.0 dBm 24.0 OK          00d 19:59:10
Wave 5      Up    Up       10Gb/s     -10.6 dBm 25.0 OK          00d 19:59:10
Wave 6      Up    Up       10Gb/s     -12.6 dBm 26.0 OK          00d 19:59:10
Wave 7      Up    Up       10Gb/s     -12.1 dBm 27.0 OK          00d 19:59:10
Wave 8      Up    Up       10Gb/s     -10.7 dBm 28.0 OK          00d 19:59:10
Wave 9      Up    Up       10Gb/s     -11.8 dBm 29.0 OK          00d 19:59:10
Wave 10     Up    Up       10Gb/s     -11.4 dBm 30.0 OK          00d 19:59:10
Wave 11     Up    Up       10Gb/s     -11.0 dBm 31.0 OK          00d 19:59:10
OSC 0       Up    Up       N/A        -18.7 dBm N/A  N/A         N/A
```

## 6.8.3 Amplifier Configuration

Certain DarkStar systems support EDFAs. The Introduction provides an overview of these systems and their characteristics. For more information, see Optical Device Specifications.

When a muxponder system comes up, all EDFAs start automatically (i.e., enabled with `no shutdown`) and come up to factory pre-set gain and power levels. For all other systems, you can configure the EDFAs automatically, as shown in the following section.

### 6.8.3.1 EDFA Configuration Workfow

EDFAs do not need to be manually configured: DXMOS does this automatically via the `control automatic` command, as shown in Figure 6-23.

**FIGURE 6-23. Setting EDFAs Automatically**

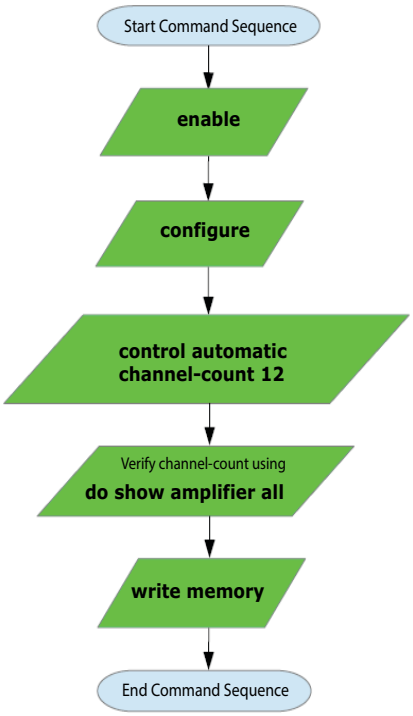


**Notes:** EDFAs are set automatically by the "control automatic" command.
You must specify the number of DWDM channels (wavelengths). The "no shutdown" command is needed to turn on the pump laser.

#### 6.8.3.1.1 DUA EDFA Configuration Workflow

EDFAs within a DUA system need to be configured though the `group` command. For more information on DUA group commands, see the Command Reference on the XKL website.

```
DUA_System> ena
```

```
DUA_System# configure

DUA_System CONF# group 0

DUA_System CONF-GROUP[0]# amplifier input edfa

DUA_System CONF-GROUP[group 0 input edfa]# control automatic channel-count 12-5

DUA_System CONF-GROUP[group 0 input edfa]# do show group 0 amplifier input edfa

Detailed information for Amplifier Group 0 Input EDFA

  Module is administratively down
  Module Status
    State .................. LOS
    Control mode ........... Automatic (Power Control)
    Channel-count ..........     12
    Calculated Setpoint ....    6.3 dBm
    Applied Setpoint .......    6.3 dBm
    Case temperature .......   31.3 C
  Pump Status
    Pump bias current ......    0.0 mA (Disabled)
    Pump EOL bias current ..  962.4 mA
    Pump temperature .......   25.0 C
  Signal Levels
    Input power ............  -45.6 dBm
    Total output power .....  -40.0 dBm
    Signal output power ....  -40.0 dBm
    Signal gain ............    0.0 dB
  Alarms
    LOS/Loss of signal
  Module Identification
    Role ................... Pre-amplifier
    Group Number ........... 0
    Group Name ............. [not defined]
    AGC Setpoint Min/Max ...   17.0/29.0 dB
    APC Setpoint Min/Max ...  -10.0/20.0 dBm

DUA_System CONF-GROUP[group 0 input edfa]# end

DUA_System#
```

### 6.8.3.2 EDFA Configuration Examples

The following section shows two different methods for configuring a DMD-A Dual (i.e., East and West lines) system.
**Note:** The DMD-A (single) will not have East and West lines.

Method 1 uses the `control automatic` command to configure all EDFAs in the system, automatically. There may be times, however, when you will want to set the power or gain manually for each EDFA to ensure optimal efficiency. In this case, you would use either the `control manually-set power` command or the `control manually-set gain` command, both of which comprise Method 2. Manually setting the EDFA power settings, as shown in Method 2, is not recommended and should be done by experienced users only.

**Method 1:** To automatically set the power for all EDFAs in the system, use the `control automatic` command. In this example, we have a channel count of 12. On the "Control mode" line of the command output, under the `do show amplifier all` command, the Automatic Power Control notification will appear as "Automatic (Power Control)."

The "Applied Setpoint," 5.7 dBm in this example (under the `do show amplifier all` command), displays the EDFA target output power, which is controlled by DXMOS. This setpoint is determined by the number of DWDM channels in the fiber, which was set using the aforementioned `control automatic` command (fully expressed as `control automatic channel-count`). Note that "Total output power" may not be the same as "Applied Setpoint." One reason for this possible discrepancy is that if there is no input optical power, then the EDFA will be automatically shutdown, and the Applied Setpoint will not be reached.

**Reminder:** For each EDFA in the system, be sure to issue the `no shutdown` command to turn on the respective pump laser inside the EDFA.

```
DMD-A_System CONF# amplifier east input edfa

DMD-A_System CONF-AMP[east input edfa]# control automatic channel-count 12

DMD-A_System CONF-AMP[east input edfa]# no shutdown
Amplifier East Input EDFA: DXMOS enabled the EDFA
Amplifier East Input EDFA: State change: Alarm
DMD-A_System CONF-AMP[east input edfa]# exit

DMD-A_System CONF# amplifier west input edfa

DMD-A_System CONF-AMP[west input edfa]# control automatic channel-count 12

DMD-A_System CONF-AMP[west input edfa]# no shutdown
Amplifier West Input EDFA: DXMOS enabled the EDFA
Amplifier West Input EDFA: State change: Alarm
DMD-A_System  CONF-AMP[west input edfa]# exit

DMD-A_System CONF# do show amplifier all


Detailed information for Amplifier East Input EDFA (20dBm East)
  Module is administratively up
  Module Status
    State ................... Alarm
    Control mode ........... Automatic (Power Control)
    Channel-count ..........    12
    Calculated Setpoint ....    5.7 dBm
    Applied Setpoint .......    5.7 dBm
    Case temperature .......   23.4 C
  Pump Status
    Pump bias current ......    0.0 mA (Disabled)
    Pump EOL bias current ..  898.7 mA
    Pump temperature .......   25.0 C
```

```
  Signal Levels
    Input power ............  -42.5 dBm
    Total output power .....  -40.0 dBm
    Signal output power ....  -40.0 dBm
    Signal gain ............    0.0 dB
  Alarms
    LOS/Loss of signal
  Module Identification
    Role ................... Pre-amplifier
    Path ................... East line input to East channel outputs
    AGC Setpoint Min/Max ...   17.0/29.0 dB
    APC Setpoint Min/Max ...  -10.0/20.0 dBm

Detailed information for Amplifier West Input EDFA (20dBm West)
  Module is administratively up
  Module Status
    State .................. Alarm
    Control mode ........... Automatic (Power Control)
    Channel-count ..........     12
    Calculated Setpoint ....    5.7 dBm
    Applied Setpoint .......    5.7 dBm
    Case temperature .......   24.2 C
  Pump Status
    Pump bias current ......    0.0 mA (Disabled)
    Pump EOL bias current ..  941.2 mA
    Pump temperature .......   25.0 C
  Signal Levels
    Input power ............  -42.1 dBm
    Total output power .....  -40.0 dBm
    Signal output power ....  -40.0 dBm
    Signal gain ............    0.0 dB
  Alarms
    LOS/Loss of signal
  Module Identification
    Role ................... Pre-amplifier
    Path ................... West line input to West channel outputs
    AGC Setpoint Min/Max ...   17.0/29.0 dB
    APC Setpoint Min/Max ...  -10.0/20.0 dBm
```

**Note:** In the Method 1 sample output above for the `do show amplifier all command`, the "Pump bias current" for both "Amplifier East Input EDFA" and "Amplifier West Input EDFA," shows "(Disabled)." This is because both EDFAs are in a LOS state (Loss of Signal), which causes the EDFA to automatically shut itself down. Applying optical power to the input of the EDFA will fix this condition.

**Method 2:** To manually control an EDFA, use the `control manually-set` command. This command enables you to specify the optical power (Option A) or optical gain (Option B) of an EDFA. For diagnostic purposes or advanced users, this command individually controls each EDFA in a system. As stated previously, not commonly used.

**Option A:** Manually set the power, for example, to 2.0 dBm. On the "Control mode" line of the command output, the Automatic Power Control notification will appear as "Manually-set (Power Control)." The "Applied Setpoint" displays the EDFA target optical output power—set as 2.0 dBm in this example. Note that "Total output power" may not be the same as "Applied Setpoint." One reason for this possible discrepancy is that if there is no input optical power, then the EDFA will be automatically shutdown, and the Applied Setpoint will not be reached..

```
DMD-A_System CONF# amplifier east input
DMD-A_System CONF-AMP[east input edfa]# control manually-set power 2.0
DMD-A_System CONF-AMP[east input edfa]# do show amplifier east input edfa
Detailed information for Amplifier East Input EDFA (20dBm East)
```

```
  Module is administratively up
  Module Status
    State ................. Alarm
    Control mode ........... Manually-set (Power Control)
    Channel-count ..........    N/A
    Calculated Setpoint ....    N/A
    Applied Setpoint .......    2.0 dBm
    Case temperature .......   23.4 C
  Pump Status
    Pump bias current ......    0.0 mA (Disabled)
    Pump EOL bias current ..  898.7 mA
    Pump temperature .......   25.0 C
  Signal Levels
    Input power ............  -39.7 dBm
    Total output power .....  -40.0 dBm
    Signal output power ....  -40.0 dBm
    Signal gain ............    0.0 dB
  Alarms
    LOS/Loss of signal
  Module Identification
    Role ................... Pre-amplifier
    Path ................... East line input to East channel outputs
    AGC Setpoint Min/Max ...   17.0/29.0 dB
    APC Setpoint Min/Max ...  -10.0/20.0 dBm
```

**Option B:** Manually set the gain to 22.0 dB. On the "Control mode" line of the command output, the Automatic Gain Control notification will appear as "Manually-set (Gain Control)." The "Applied Setpoint" displays the EDFA target optical gain— set as 22.0 dB in this example. Note that "Signal gain" may not be the same as "Applied Setpoint." One reason for this possible discrepancy is if the output power setpoint is unreachable due to the input power condition. In other words, the requested gain (if achievable) results in an output optical power exceeding the EDFA maximum..

```
DMD-A_System CONF-AMP[east input edfa]# control manually-set gain 22.0
DMD-A_System CONF-AMP[east input edfa]# do show amplifier east input edfa
Detailed information for Amplifier East Input EDFA (20dBm East)
  Module is administratively up
  Module Status
    State ................. Alarm
    Control mode ........... Manually-set (Gain Control)
    Channel-count ..........    N/A
    Calculated Setpoint ....    N/A
    Applied Setpoint .......   22.0 dB
    Case temperature .......   23.0 C
  Pump Status
    Pump bias current ......    0.0 mA (Disabled)
    Pump EOL bias current ..  898.7 mA
    Pump temperature .......   25.0 C
  Signal Levels
    Input power ............  -38.7 dBm
    Total output power .....  -40.0 dBm
    Signal output power ....  -40.0 dBm
    Signal gain ............    0.0 dB
  Alarms
    LOS/Loss of signal
  Module Identification
```

```
    Role ................... Pre-amplifier
    Path ................... East line input to East channel outputs
    AGC Setpoint Min/Max ...   17.0/29.0 dB
    APC Setpoint Min/Max ...  -10.0/20.0 dBm
DMD-A_System CONF-AMP[east input edfa]# exit
DMD-A_System CONF# exit
DMD-A_System#
```

**Note:** In the Method 2 sample outputs above for the `do show amplifier east input edfa` command, the "Pump bias current" shows "(Disabled)." This is because "Amplifier East Input EDFA" is in a LOS state (Loss of Signal), which causes the EDFA to automatically shut itself down. Applying optical power to the input of the EDFA will remove this condition.

# 6.9 Redundancy (APP)

DarkStar systems may be provisioned for redundant operation using the `protection app` (Automatic Path Protection) command.

APP provides redundancy for a connection by transmitting the same signal over two different physical fiber connections. The interfaces that comprise a redundant path are called the working and protection interfaces. Together, a working interface and a protection interface form an APP group. Network traffic normally flows through the primary working interface. If the primary working interface is interrupted, the APP group switches to the backup protection interface.

By default, an APP group is revertive, which means that traffic that has switched to the protection interface will automatically revert to the working interface when it becomes available again. In a non-revertive configuration, switching traffic back to the working interface must be accomplished manually. This configuration may be desired because switching between currently selected resources incurs a brief disruption to the link measurable in milliseconds. The `app` command sets up and configures APP groups. To create a new APP group, give the `app` command two arguments:

**1.**The working interface.

**2.**The protection interface.

The following example illustrates how to create an APP group, with `wave west 0` as the working interface and `wave east 0` as the protection interface:

```
localhost> enable
localhost# configure
localhost CONF# app wave west 0 wave east 0
localhost CONF# exit
localhost# write memory
Are you sure? [yes/no] yes
localhost#
```

If the working interface experiences intermittent connection problems, a revertive APP group may rapidly switch back and forth between working and protection interfaces, which can cause data loss or seriously degrade network performance. In such a case, it may be useful to set a holdoff value, which specifies the time duration before an APP group reverts from the working to the protection interface. Holdoff time is specified in milliseconds.

The following example illustrates how to set a holdoff value for an APP group, in this case with a value of 1 minute (60000 milliseconds):

```
localhost> enable
localhost# configure
localhost CONF# app revertive wave west 0 holdoff 60000
localhost CONF# exit
localhost# write memory
Are you sure? [yes/no] yes
localhost#
```

To following example illustrates how to set an APP group to be non-revertive:

```
localhost> enable
localhost# configure
localhost CONF# no app revertive wave west 0
localhost CONF# exit
localhost# write memory
Are you sure? [yes/no] yes
localhost#
```

An APP group may be locked to prevent switching. Locking an APP group is helpful during physical maintenance of interfaces in the APP group, as it can prevent an interruption in network traffic.

The following example illustrates how to lock an APP group:

```
localhost> enable
localhost# configure
localhost CONF# app lockout wave west 0
localhost CONF# exit
localhost# write memory
Are you sure? [yes/no] yes
localhost#
```

## 6.10 Setting Up Line Protection

```
protection
```

A protected topology has two different fiber paths between two locations, a primary fiber path and a backup fiber path. Protection typically uses the backup fiber path when the primary fiber path is disrupted.

In DarkStar systems with Line Protection, there are two line ports, A and B. Line A is typically the primary fiber path while Line B is typically the backup fiber path. The DarkStar system transmits identical optical signals on Line A and Line B (i.e., the same data is sent on both paths). For the receive direction, an Optical Protection Switch (OPS) selects which line is active, Line A or Line B.

Typically, the primary fiber path is the active line unless a switching event occurs, whereupon the operating system switches the optical protection to make the backup fiber path the active line. The switching event is logged. If the primary fiber path is restored, the operator can command the DarkStar system to revert the active line back to the primary fiber path.

Alternatively, protection can be configured to automatically switch back to the primary fiber path after the switch event is cleared for a set amount of time.

Systems typically use the OSC Loss of Signal alarm as the switching event. Systems with an input EDFA and no RAMAN amplifier can alternatively configure the switching event to be the input EDFA's Loss of Signal Alarm. Input EDFA LOS should be used in the instance when either fiber path has a DarkStar Line Amplifier on it. DAT100 systems offer an additional alternative in the wave Loss of Signal alarm. DAT100 systems will default to this switching source if neither the OSCs or input EDFA are present in the system.

When the Line Protection feature is present, it is enabled by default. An operator may disable protection (not recommended) with the protection disable command in the DarkStar configure mode. The protection condition can be written to the config file to maintain it across reloads. See the Command Reference on the XKL website for more information about the protection commands.

# 7

# Muxponder and Transponder Testing

At this point, you should already have connected your muxponders or transponders (with DMD-A) in accordance with the information presented in Connecting a DarkStar System.

All DarkStar systems are suitable for the testing documented here. Testing will cover three phases: (1) Data Path Testing, (2) Testing with an External Source, and (3) Transport Testing at 10GE. Upon conclusion of Transport Testing, refer to the Remove Crossbar Connections: section to properly back out of the final testing phase.

**Understanding the Testing**

Each DarkStar muxponder and transponder model has its own unique features and capabilities, so for brevity, we will show only a selection of products. Also note that we show test diagrams for both muxponders and transponders (with DMD), even though their testing is identical. For the transponder illustrations, the mux/demux can be either a passive mux/demux device without amplification (DMD-P) or a mux/demux system with amplification (DMD-A). We refer to both collectively as simply "DMD."

## 7.1 Data Path Testing

Covered here will be Fiber Plant Verification and XKL's Bit Error Ratio Test (BERT).

### 7.1.1 Fiber Plant Verification

These tests verify the fiber plant between the DarkStar systems, confirming that DarkStar line transceivers (i.e., DWDM) are functioning properly and that the customer fiber plant is properly connected to the DarkStar systems. The following sections, Muxponder Fiber Plants (Simplified Views) and Transponder Fiber Plants (Simplified Views), offer functional diagrams depicting how your fiber will connect between a pair of DarkStar systems.

**Important:** The line port of each DarkStar system needs to be connected with single mode (SM) fiber. Either connect your DarkStar muxponder systems as shown in Muxponder Fiber Plants (Simplified Views) or connect the DarkStar transponder systems with DMDs as shown in Transponder Fiber Plants (Simplified Views).

### 7.1.1.1 Muxponder Fiber Plants (Simplified Views)

FIGURE 7-1. DQM10

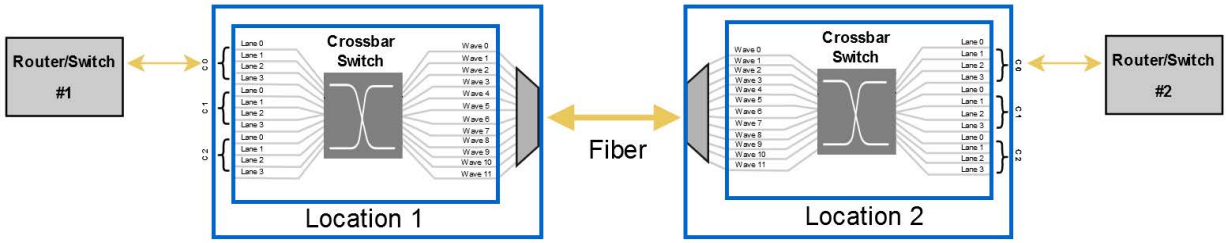


FIGURE 7-2. DQM100

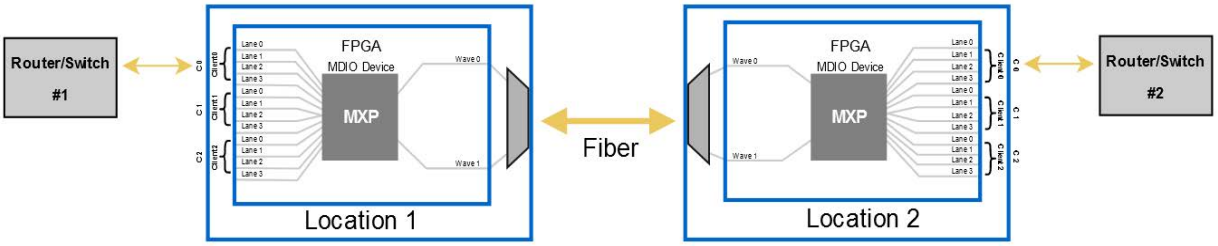


FIGURE 7-3. DSM10 -10

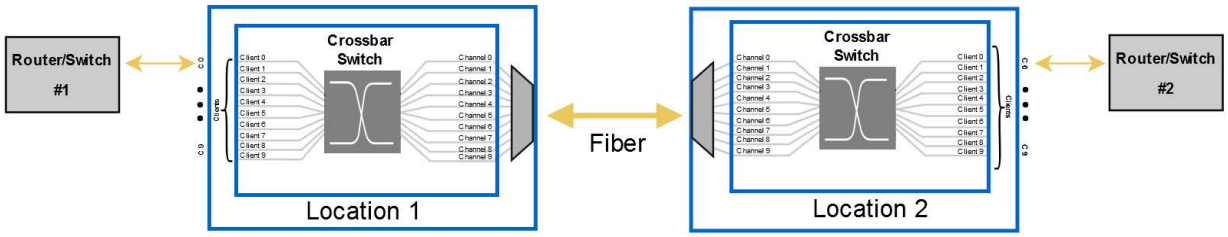


FIGURE 7-4. DQM400-4

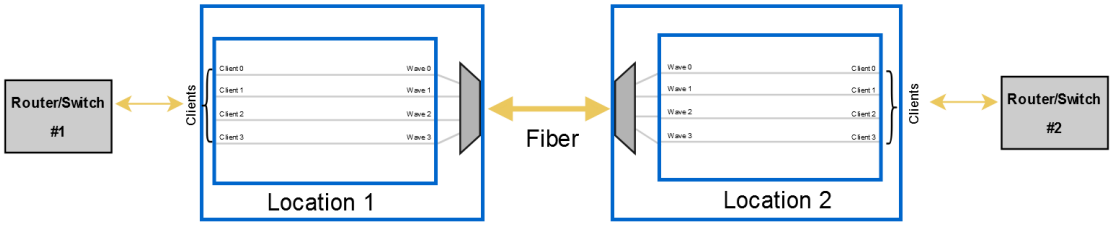


FIGURE 7-5. DFM400-12

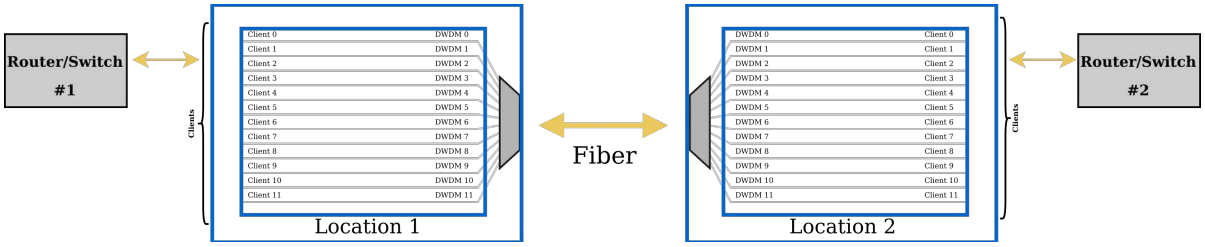

### 7.1.1.2 Transponder Fiber Plants (Simplified Views)

**FIGURE 7-6. DQT10**

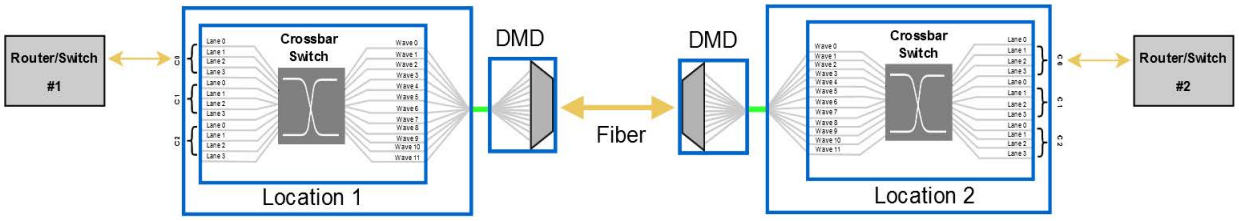


**FIGURE 7-7. DQT100**

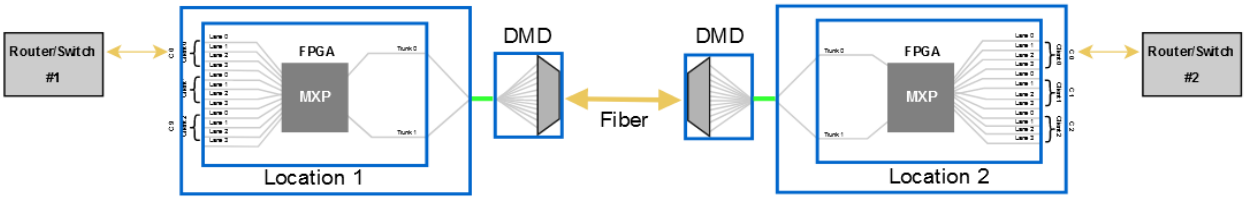


**FIGURE 7-8. DQT400-4**

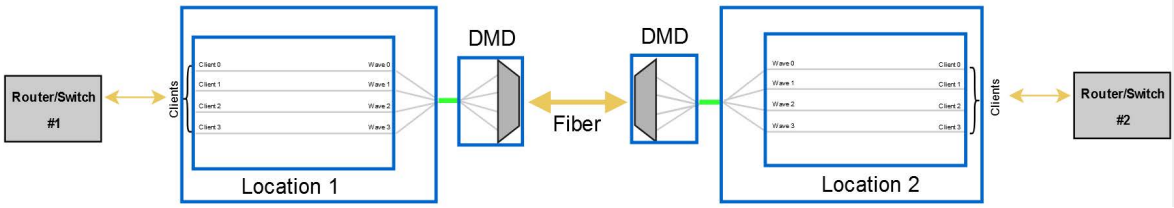


**FIGURE 7-9. DFX400-12**

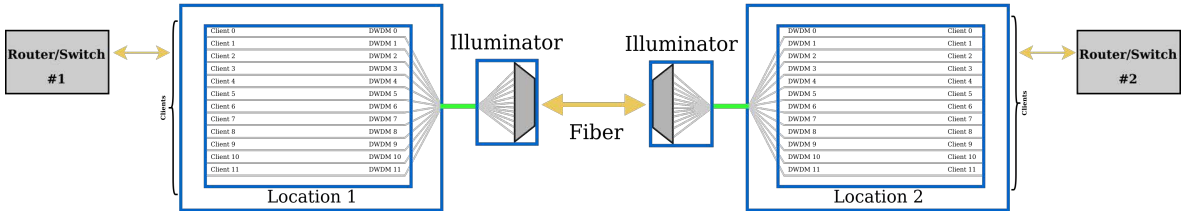

### 7.1.2 XKL's Bit Error Ratio Test (BERT)

If you do not have your own test source, or if you want additional testing, you can use the internal BERT, which is included with some DarkStar systems. In the following examples, we use the DQT10, DQM10, DQM400, and DFM400 systems.

You can use BERT to verify various elements of your setup. This includes the fiber connections between the DarkStar systems, as well as the connections between client transceivers in the DarkStar systems and the customer equipment.

The bit error ratio (BER) is the ratio of received bit-errors to total received bits. When you run a BER test, a Pseudo Random Binary Sequence (PRBS) is transmitted. The transmitted data (i.e., from Location1) and received data (i.e., at Location2) are compared. If the comparison results in an identical match, then the link is error free, and the BER test will return 0 errors.

Figure 7-10 illustrates the BERT with DQT10 transponders, Figure 7-11 illustrates the BERT with DQM10 muxponders, Figure 7-12 illustrates the BERT with DQM400-4 muxponders, and Figure 7-13 illustrates the BERT with DFM400-12 muxponders.

**FIGURE 7-10. DQT10 Transponders and BERT**

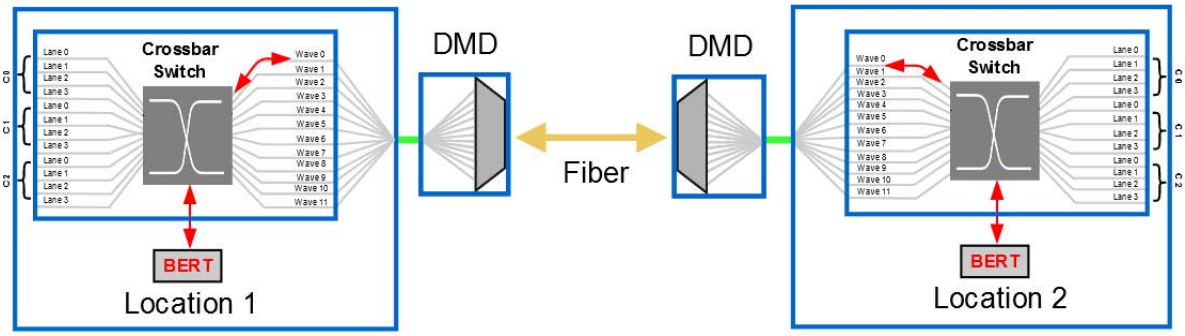


**FIGURE 7-11. DQM10 Muxponders and BERT**

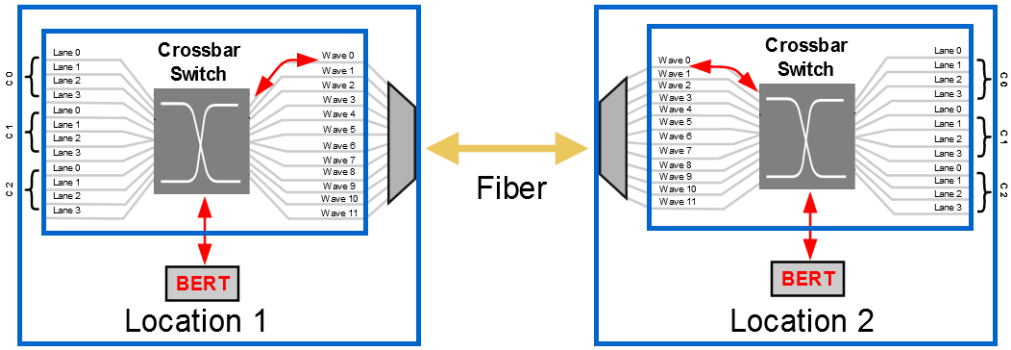


**FIGURE 7-12. DQM400-4 Muxponders and BERT**

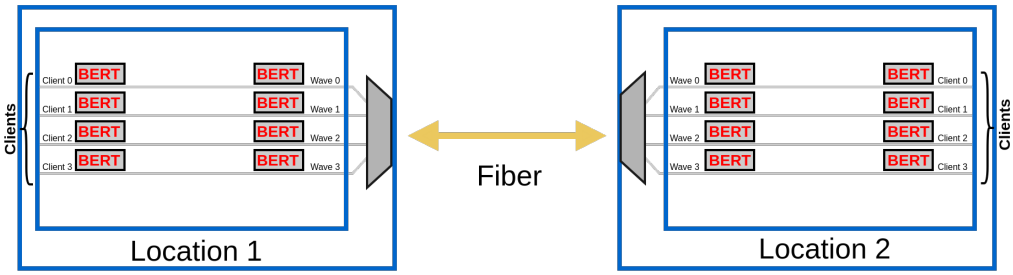

**FIGURE 7-13. DFM400-12 Muxponders and BERT**

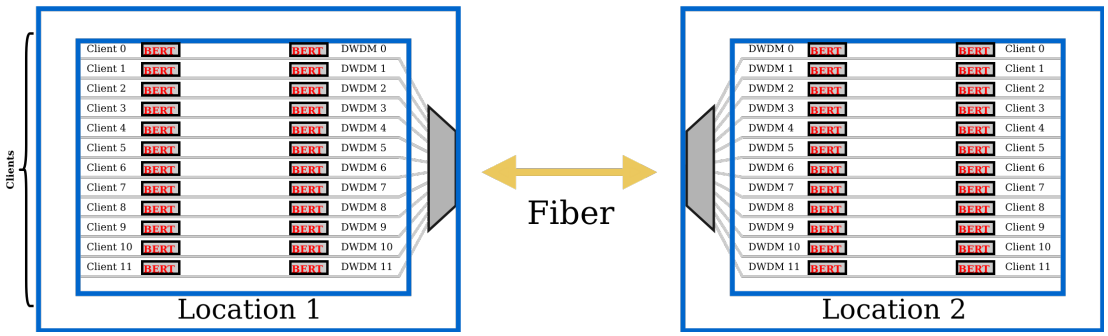


### 7.1.2.1 Enable XKL's BERT

To configure BERT, issue the `bert transmit` command on the sending interface, and a `bert receive` command on the receiving interface. Issue a `show bert` command to see the BERT results.

**Notes:**

- When a DQT10, DQM10, or DSM10-10 wave interface is idle (i.e., not in a connection with another DarkStar interface), aPRBS pattern is used to modulate the light coming from that wave interface. This is done to keep the line transceivers (i.e., DWDM) transmitting an optical signal, which helps to keep constant optical power in the fiber. The BERT feature uses this same PRBS pattern. Consequently, every wave interface that is idle is in fact already transmitting the BERT pattern. As a result, it may not be necessary to issue the bert transmit command before the `bert receive` command, as the transmitter is likely already sending the pattern.
- You should not see any errors in the BERT reports.
- Depending on how a module that uses host-side BERT is configured, it may divide and distribute the BER count amongst the modules optical lanes.

**Confirm Encapsulation**

Use the DXMOS CLI Help to determine the available encapsulation types for your specific product (e.g., `CONF-MOD-CLIENT[n]# encapsulation`). For details on the `encapsulation` command, refer to the Command Reference on the XKL website.

Issue the appropriate `show module` command on each system and verify that this is set appropriately. In this example, `show module wave 0` is used.

```
Location1> enable
Location1# configure
Location1 CONF-MOD-WAVE[0]# do show modules wave 0

Wave 0    Up
  Description: .... N/A
 Tx: ............. OK                          Rx: .......... OK
 State Changed: .. 00d 00:02:51                Channel: ..... 20.0
 Tx Laser: ....... Enabled                     Frequency: ... 192000 GHz
 Tx Power: ....... -11.4 dBm                   Wavelength: .. 1561.42 nm
 Rx Power: ....... -3.6 dBm                    Module Type: . Tunable OSFP
 Loopback: ....... Off                         Temperature: . 61 C
 Encapsulation: .. 4x100GAUI-2                 Vendor: ...... Acacia Comm Inc.
 Last Cleared: ... 00d 01:53:24                Part No.: .... DP04SFP8-E30-001
 Link Downtime: .. 00d 00:00:32                Serial No.: .. 212855600
 Maximum Reach: .. Unknown                     MFG Date: .... 210721

Location1 CONF-MOD-WAVE[0]#
```

**BERT Logging Function**

For longer test runs, turn on the BERT logging function from the Location 1 configure prompt (`Location1 CONF#`):

```
Location1 CONF# bert log
```

**Run BERT**

From Location 1, use the command `bert transmit` on the appropriate module (in this example it's `module wave 0`) to start the test signal:

```
Location1 CONF# module wave 0
Location1 CONF-MOD-WAVE[0]# bert transmit
```

From Location 2, use the `bert receive` command on the corresponding module (in this example it's `module wave 0`) to start the error analysis.

```
Location2 CONF# module wave 0
Location2 CONF-MOD-WAVE[0]# bert receive
```

Then use the `do` show bert command at the corresponding Location 2 prompt to see the BERT results:

```
Location2 CONF-MOD-WAVE[0]# do show bert

Module       BERT Rx/Tx BERT Time    Status  Bits Rec Errors     BER     Rate
------------ ---------- ------------ ------- -------- ------ ------- --------
Wave 0           On/On  00d 00:00:15      OK  6.3e12      0       0   400Gb/s
```

Repeat this procedure for each of the wave interfaces.

**Stop BERT**

At the end of a BERT, use the `no <receive|transmit>` command to stop the test in the order given.

```
Location2 CONF-MOD-WAVE[0]# no bert receive

Location1 CONF-MOD-WAVE[0]# no bert transmit
```

After stopping BERT, return to configuration mode (CONF#) to proceed with external testing.

```
Location1 CONF-MOD-WAVE[0]# exit
Location1 CONF#

Location2 CONF-MOD-WAVE[0]# exit
Location2 CONF#
```

**Important:** Before proceeding to external testing (i.e., switch/router or your own test source), be sure to verify that the power levels of the client transceivers do not exceed the XKL recommendations. See Recommended Transceiver Sensitivity Levels.

The manufacturer of the client transceiver also reports a minimum and maximum receive power. Issue the `show modules client 0 verbose` or `show modules client 0 media-side` command to see these values. If the RxPow value is too high, exceeding the manufacturer's Rx Laser Input Power High Warning value, then use an appropriate attenuator.

**Note:** The following example shows only partial output, highlighting client and Rx information.

```
Location1 CONF# do show modules client 0 verbose
 Partial Detailed information for Interface Client 0
  Description: .....................
  Vendor: ........................... AVAGO
  OUI: .............................. 00:17:6A
  Part Number: ...................... AFBR-79EIDZ
  Manufacturing Date: ............... 151128
  Serial Number: .................... QF4804CZ
  Module Type: ...................... QSFP+
.
.
.
Rx Laser Input Power: ............ Reported By Lane (below)
      High Alarm: ................... 3.3 dBm
      High Warning: ................. 2.3 dBm
      Low Warning: .................. -9.5 dBm
      Low Alarm: .................... -13.5 dBm
 Lane 0:
       .
       .
       .
      Rx Laser Input Power: ......... -2.0 dBm
```

# 7.2 Testing with an External Source

Included in this section:

- Systems With a Crossbar Switch
- Systems Without a Crossbar Switch

## 7.2.1 Systems With a Crossbar Switch

Systems having a crossbar switch include the DQT10, DQM10, and DSM10-10. Covered here will be Diagnostic Loopback and Transport Testing at 10GE.

The examples in this section use client 0 for the external test source connection or for the router/switch connection.

If you have your own test source, you can use that instead of a router or switch. If you have only one port of client equipment, then connect that equipment to client 0 on Location 1 and install an optical loopback on client 0 of Location 2. If you have two ports of client equipment, then connect the second port to client 0 on Location 2. However, before we perform end-to-end testing of the link as described in Transport Testing at 10GE, we first start with Diagnostic Loopback.

**Important:** Before proceeding, be sure to verify the power levels of the client interfaces do not exceed the XKL recommendations. See Recommended Transceiver Sensitivity Levels.

### 7.2.1.1 Diagnostic Loopback

The ability to loopback signals in the DarkStar system can help to localize a problem. Loopbacks in DQT10, DQM10, and DSM10-10 systems use the crossbar switch, which enables any-to-any connections in the electrical domain. No matter what topology you have, the crossbar can help isolate topology segments with remote, soft-selectable loopback testing.

To verify the client connections, the first step is to soft-configure a loopback on the client port (in this example, client 0 or C0) on Location 1. At the Location 1 prompt (`Location1`), make sure you are at the configure level (`CONF#`), then connect client 0, lane 0 to itself. The example below assumes you have a 10GE router/switch port or test source.

`Location1 CONF#` **connect client** *0/0* **client** *0/0* **encapsulation 10gigabitethernet**

Router/switch #1 is now looped back to itself. If you can enable a loopback test on your router port, do that now. Even though router/switch #1 is connected to the DarkStar system, it will appear to be connected to a loopback jumper of fiber.

Figure 7-14 illustrates the initial soft-configured loopback setup for transponders, while Figure 7-15 Illustrates that same setup for muxponders.

**FIGURE 7-14. Transponders: Router/Switch #1 and Client 0 Loopback.**

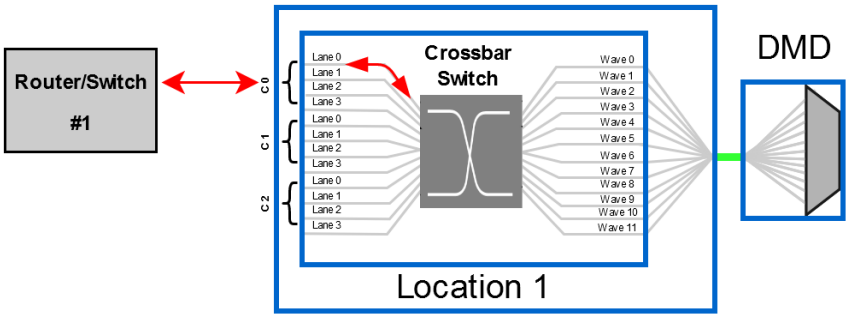

**FIGURE 7-15. Muxponders: Router/Switch #1 and Client 0 Loopback**

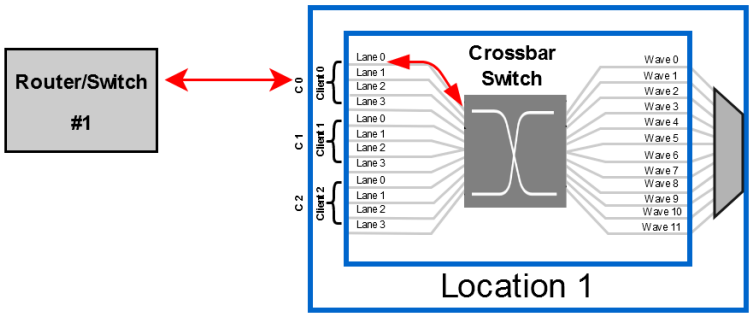


Figure 7-16 provides a closer look at a loopback running through client 0, lane 0. The solid double-arrow depicted in our muxponder and transponder diagrams represents the testing data-path (via the In/Out lines) of this duplex fiber.

**FIGURE 7-16. Closeup View of Router/Switch #1 and Client 0 Loopback**

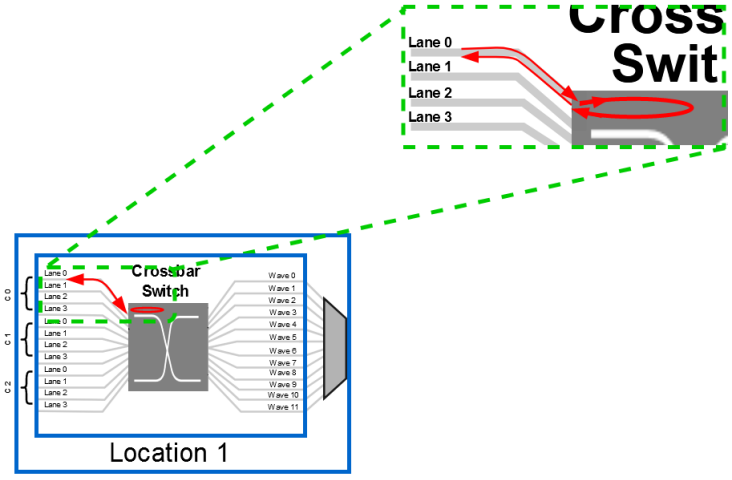


Now, remove the soft-configured loopback and connect lane 0 (of C0) to wave 0 of Location 1. This will enable the transport of the router/switch #1 data to Location 2.

```
Location1 CONF# no connect client 0/0 client 0/0
Location1 CONF# connect client 0/0 wave 0 encapsulation 10gigabitethernet
```

At the Location 2 prompt (`Location2 CONF#`), loopback the wave interface on Location 2.

```
Location2 CONF# connect wave 0 wave 0 encapsulation 10gigabitethernet
```

Figure 7-17 illustrates the loopback to Location 2 for transponders, while Figure 7-18 illustrates that same setup for muxponders.

**FIGURE 7-17. Transponders: Loopback Location 2 Wave Interface**

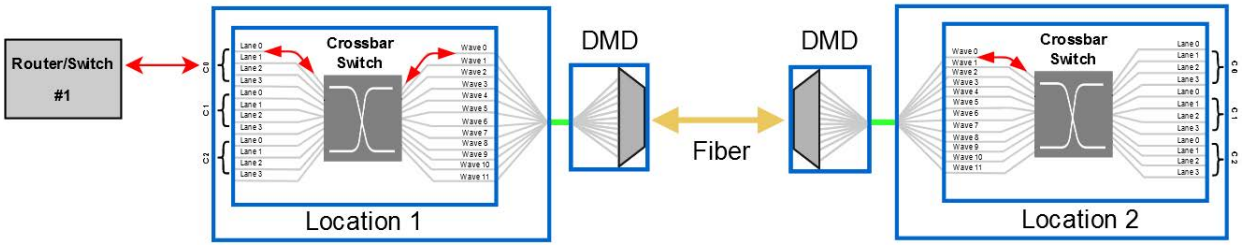


**FIGURE 7-18. Muxponders: Loopback Location 2 Wave Interface**

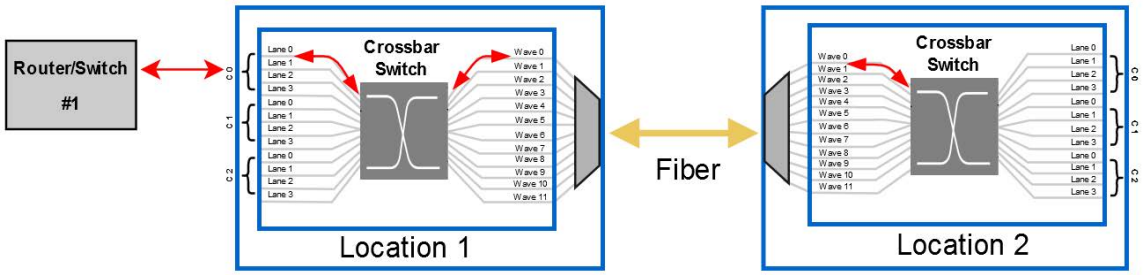


At this point, Location 1 is transporting router/switch #1 data across the fiber plant to Location 2, where it is then looped back to Location 1. This enables you to verify the main fiber plant between Location 1 and Location 2.

Now remove the loopback in Location 2.

`Location2 CONF#` **no connect wave** *0* **wave** *0*

Also remove the connection on Location 1:

`Location1 CONF#` **no connect client** *0/0* **wave** *0*

The next section tests the connection between router/switch #1 and router/switch#2.

### 7.2.1.2 Transport Testing at 10GE

Using the same setup and connections that were used in the loopback testing section, where client 0 (C0) is connected to wave 0 on both systems, you can change the crossbar connection to use wave 1 instead. In the following example, however, we use client *n*, lane *n* to wave *n* (client 0, lane 0 to wave 0).

#### Connect Two Systems at 10GE:

Here, we verify the transport of data between router/switch #1 and router/switch #2. Figure 7-19 illustrates this test with transponders, while Figure 7-20 illustrates that same test with muxponders.

**FIGURE 7-19. Transponders: Transport Testing at 10GE**

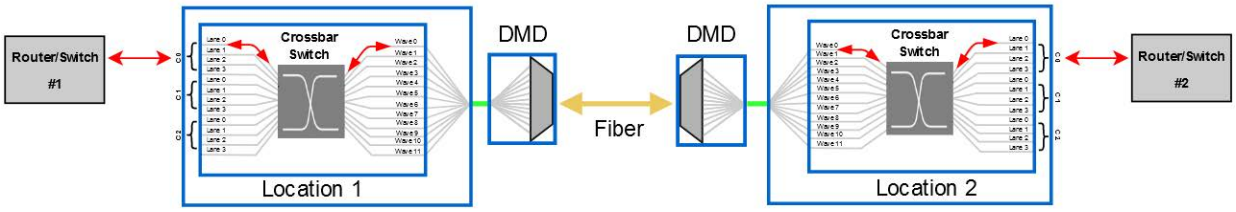


**FIGURE 7-20. Muxponders: Transport Testing at 10GE**

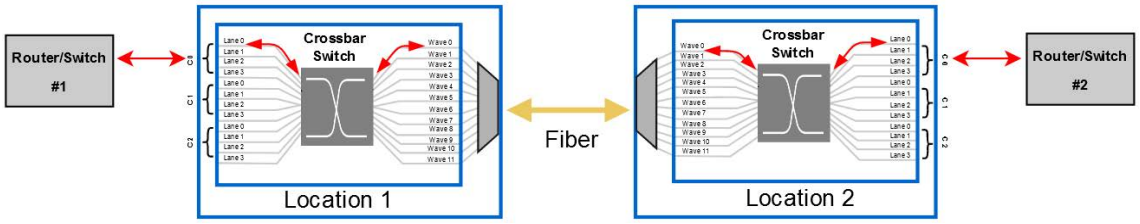


From the Location 1 prompt:

```
Location1 CONF# connect client 0/0 wave 0 encapsulation 10gigabitethernet
```

From the Location 2 prompt:

```
Location2 CONF# connect client 0/0 wave 0 encapsulation 10gigabitethernet
```

Now verify that the connection between router/switch #1 and router/switch #2 is fully functional.

#### Remove Crossbar Connections:

Once you verify the connection between router/switch#1 and router/switch#2, all of your testing is complete and you can remove your crossbar connections.

First, remove the connection from Location 1, as shown in the following example.

```
Location1 CONF# no connect client 0/0 wave 0

Switch Disconnect: Successfully disconnecting (Client 0/0, Wave 0)
Location1 CONF# exit
Location1#
```

Then remove the connection from Location 2, as shown in the following example.

```
Location2 CONF# no connect client 0/0 wave 0

Switch Disconnect: Successfully disconnecting (Client 0/0, Wave 0)
Location2 CONF# exit
Location2#
```

## 7.2.2 Systems Without a Crossbar Switch

Systems without a crossbar switch include the DQT400, DFX400, DQM400, and the DFM400. The examples in this section use client 0 for the external test source connection or for the router/switch connection. Covered here will be Transport Testing at 400GE.

### 7.2.2.1 Transport Testing at 400GE

For transport testing at 400GE, use the `encapsulation` command.

#### Connect Two Systems at 400GE:

Here, via the `encapsulation` command, we verify the transport of data between router/switch #1 and router/switch #2. Figure 7-21 illustrates this test with transponders, while Figure 7-22 illustrates that same test with muxponders.
**Note:** The number of client transceivers is equal to the number of line transceivers. Additionally, client 0 is physically connected to wave 0, client 1 to wave 1, etc.

**FIGURE 7-21. Transponders: Transport Testing at 400GE**

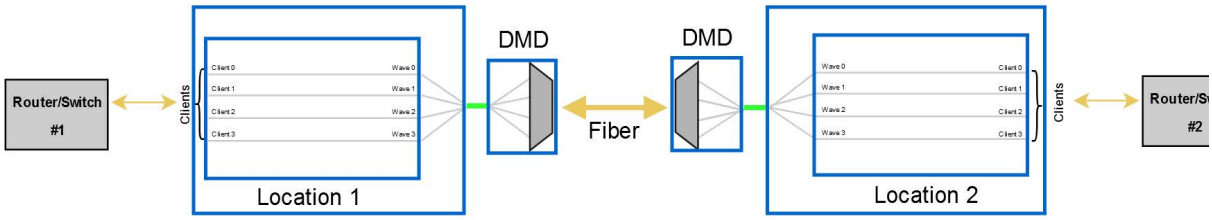


**FIGURE 7-22. Muxponders: Transport Testing at 400GE**

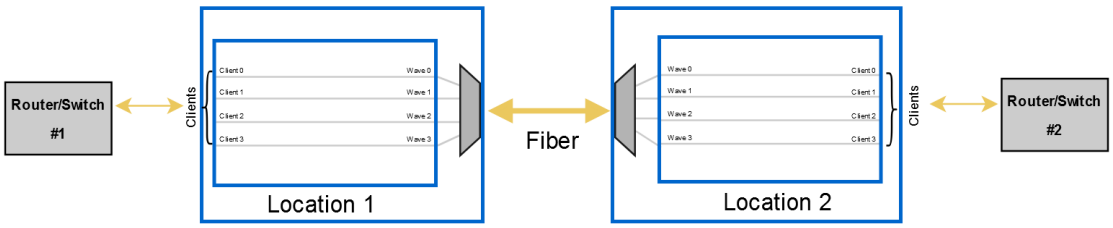


The `encapsulation` configure command can be accessed while in client-module configuration mode (`CONF-MOD-CLIENT[n]#`) or wave-module configuration mode (`CONF-MOD-WAVE[n]#`). There are multiple encapsulations from which you can choose, as shown in the following example.

From the Location 1 prompt, specify and set the encapsulation:

```
Location1 CONF# module wave 0
Location1 CONF-MOD-WAVE[0]# encapsulation

 one of the following:
 1xCAUI-4
 2xCAUI-4
 400GAUI-8
 400GAUI-8_ZR
 4x100GAUI-2
 4x100GAUI-2_ZR
```

```
Location1 CONF-MOD-WAVE[0]# encapsulation 400GAUI-8
Wave 0 encapsulation set to 400GAUI-8
```

From the Location 2 prompt, set the same encapsulation as specified in Location 1.

```
Location2 CONF# module wave 0

Location2 CONF-MOD-WAVE[0]# encapsulation 400GAUI-8
Wave 0 encapsulation set to 400GAUI-8
```

Now verify that the connection between router/switch #1 and router/switch #2 is fully functional.

# 8

# Troubleshooting

## 8.1 Introduction

This chapter provides troubleshooting information related to the operation of DarkStar systems and networks. It covers:

- Good practices for setting up the system and running configuration so that important incident notifications reach the event log and SNMP.
- Good crash recovery procedures, so that the system returns as quickly as possible to a known good state.
- Console procedures for reviewing and revising the state of the system and its network connections.
- Hardware procedures for interpreting LED patterns and booting via the hardware reset buttons.
- How the system switches to recovery mode in the face of catastrophic error.

In normal operations, many day-to-day problems are related to configuration changes for either the system and its management services, or the local IP network with which it communicates. Please be aware that this chapter covers issues that you may experience as you initially set up and learn to operate a DarkStar system or network. If you experience issues beyond the scope of this guide, especially if you experience a loss of customer traffic, contact an XKL representative for professional technical support.

## 8.2 Create a Saved Configuration for Backup

Ideally, you should have three saved configurations, as described below.

**TABLE 8-1. Saved Configuration Files**

| Purpose | Description |
|---|---|
| *For local boot* | A valid, current running configuration saved in system flash memory (use `write memory`). This restores a good system configuration ready for when the system automatically recovers. |
| *For remote boot* | A similarly accurate configuration saved on a TFTP server (use `write network`). |
| *For backup* | An accurate configuration on an FTP or TFTP server that can be called in manually if both the local and the remote boot config files become damaged. |

TFTP is a simple file transfer protocol without a strong guarantee of integrity when copying a file. When fetching a critical file with TFTP, you should do the following:

1. TFTP transfer to a temporary file.
2. Verify the checksums (use the `checksum` command).
3. Copy the file to the final destination.



*Config files contain passwords. Make sure you have an accurate record of the passwords that are required to access the system.*

In addition:

- Configure an SNMP server that watches for unplanned restart traps. If any are seen, the system should be examined (see Diagnosis).
- Use SNMP input to compile a database of wear metrics, such as temperatures, currents, optical power, etc., so that degrading components can be identified and scheduled for replacement before they fail. Most DarkStar transceivers, as well as power and fan modules, can be field-replaced without disturbing customer traffic.

### 8.2.1 Operator Notification

In most situations, the operator is notified of a system event via the console, and the restart is notified by SNMP traps. The startup configuration is reloaded and restart is automatic, without operator intervention. Make sure that all useful notifications and logging are enabled, so that you receive them.

- Enable system event logging using the config mode `logging` command. The console event log buffer is cleared when the system reloads, so you should direct output to a log file as well as to the console.
- Configure SNMP to send system alerts ("traps" in SNMP) by using the config mode command `snmp-server`, and selecting trap types `xkl` and `xkl-generic` (otherwise, by default, SNMP will send you all possible SNMP network traps).
- Enable the AAA feature (using the `aaa new-model` command) so that TACACS+ logs an auditable account of configuration changes. The log may help your diagnosis by showing who issued what commands in the period leading up to the crash.
- A crash dump file (`/dump/dump.exe`) is generated by default on an unscheduled restart (not on a `reload` command). Your technical support team may need it for diagnosis.

## 8.3 Crash Recovery

In the unlikely event of a system crash, a DarkStar system is designed to notify the operator and to automatically recover with (as far as possible) no loss of customer traffic through the crossbar switch complex.



**Avoid the temptation to get operational again by cycling power to force a cold boot. Cycling power disrupts customer traffic. It should only be done if a hard reset of all hardware is desired, or if a warm reload does not resolve a particular situation.**

### 8.3.1 Automatic Recovery from a Warm Restart

No operator action is needed. The system will restart itself, using the configuration you have previously saved (see above) in system flash memory. Traffic is not affected, even though the system may not be responding to commands, and you may lose the console for a while. The system's management software (DXMOS) runs separately from the customer data transport; failure of software or corrupted flash memory on the management side does not affect customer data.

You cannot make changes to the running configuration until DXMOS has reloaded.

The warm restart event is notified to the event log, and also via SNMP. An unexpected warm restart creates a system dump file (`/dump/dump.exe`). Investigate all warm restart events as quickly as possible.



*A warm restart resulting from software failure detected by hardware does* not *create a system dump file.*

### 8.3.2 Automatic Recovery from a Cold Boot or Power Recycle

No operator action is needed. Traffic is disrupted since power is lost on all interfaces. Once the console has come back, you should verify (using `show modules`) that optical communications have resumed. Check the output report from the `show modules` command, looking for LOL and LOS statuses that show if the optical signal is lost. Check the module receive power values: if they are around -40dBm, then no light is reaching them. A system dump file is not created when a cold boot or power recycle occurs.

### 8.3.3 Manual Crash Recovery Only if Automatic Recovery Fails

If the system cannot restart due to a corrupt or invalid saved config file, or corrupted system flash memory, you need to manually intervene during the boot process. From the console, enter `CTRL+C` before the boot process completes. Review Recovery Mode for more information on the boot process.

### 8.3.4 Diagnosis

You should be able to provide the following information to your technical support team to help them diagnose the cause of the crash:

- The crash notification from the console, if it is available.
- The system dump file `/dump/dump.exe`.

If the dump file has recently been modified and has a non-zero size, it will contain information needed by XKL to debug the crash. The file must be uploaded to an FTP or TFTP server, then transferred to XKL via email or FTP upload (if the file is large) for analysis. Use one of the following methods to upload the dump file to a server.

Upload using the `curl ftp` command:

- Enter the enabled mode of DXMOS using `enable`.
- Verify that the dump file has recently been modified and has a non-zero size using `dir /dump`.
- Upload with `curl /dump/dump.exe ftp://<FTP server IP address>/<FTP server path>/dump.exe`.
- Exit enabled mode using `disable`.

Upload using the `upload` command from Boot (typically faster):

**Note**: This must be performed using the DarkStar serial console, and RIP routes to the TFTP server must be replaced with static routes for Boot upload.

**Note**: A description of the `curl` command can be found in section 3.6.8 of the *XKL Command Reference*.

System monitoring activities will be halted. Customer traffic will not be disrupted.

1. Enter the enabled mode of DXMOS using `enable`.
2. Verify that the dump file has recently been modified and has a non-zero size using DXMOS `dir /dump`.
3. If needed, write any DXMOS configure settings that have been modified and not yet saved to the startup-config using the `write memory` command or equivalent.
4. Use the `reboot none` command to halt DXMOS and activate the Boot program.
5. At the Boot> prompt, use the `enable wheel` command to enable the **upload** command.
6. At the Boot# prompt, use the `upload file /dump.exe <TFTP server IP address> /<TFTP server path>/dump.exe` command to upload the dump file.
7. At the Boot# prompt, use the `disable wheel` command to disable the **upload** command.
8. At the Boot# prompt, use the `boot` command to start DXMOS.

# 8.4 Console Procedures

Most troubleshooting is done from remote consoles, using `show` commands to assess the status of the system or network, and `configuration` (`config`) commands to revise configuration settings. Issues fall into two categories:

- ***System Issues.*** Many system issues are due to errors or changes in management configuration settings. This includes operator authentication and authorization, console connection, and access issues to external servers, such as SNMP, caused by invalid IP addressing or other management server connectivity failure.
- ***Networking Issues.*** Many networking issues are due to IP addressing problems or changes, and to interruptions in access to external IP servers. Transceiver problems may be due to faulty fiber connections, or to changes in interface configuration on the local or the remote DarkStar system.

The following tables list symptoms, possible causes, and possible solutions for both system and networking issues.

**TABLE 8-2. System Troubleshooting Matrix**

| Symptom | Possible Cause | Possible Solution |
|---|---|---|
| Operator unable to run commands | Incorrect authentication or authorization of operator. | Review and revise AAA settings for authentication and authorization. Check passwords in use. |
| Operator loses existing access to commands | • Password change.<br>• Warm boot from an older config file may have re-activated older passwords. | Review and verify operator passwords in use. |
| No serial connection / no activity at console | Incorrect or faulty cable. | Check connection and reseat if necessary. |
| | Faulty cable connection. | Replace with good cable. |
| Link LED is on, but the activity LED remains off | Wrong IP address assigned to Ethernet interface. | In `CONF-MGMT-ETH[n]#` mode, use the `ip address` command to correct addressing issues. |
| | Ethernet ports administratively shutdown. | Issue a `no shutdown` command to restart. |
| | Remote routing problems. | |
| OSC trunk LED dark, OSC line state flapping/ bouncing | Faulty fiber connection between DarkStar systems. | Clean and reconnect fiber connections. |
| | OSC interface is administratively down. | In `CONF-MGMT-OSC[n]#` mode, issue a `no shutdown` command. |
| | Insufficient optical signal to noise ratio in long-haul configuration. | Contact XKL technical support. |
| System unreachable via OSC | • No IP address assigned to OSC interface.<br>• Bad or missing IP routes. | In `CONF-MGMT-OSC[n]#` mode, issue an `ip address` command to correct IP addressing. |
| SNMP fails to run | Incorrect SNMP configuration or SNMP server unreachable. | • Verify and revise SNMP server IP address(es).<br>• Verify and revise SNMP configuration. |

**TABLE 8-2. System Troubleshooting Matrix**

| Symptom | Possible Cause | Possible Solution |
|---|---|---|
| DXMOS fails to load / 600-second timeout | Incorrect TFTP boot configuration. | Boot DXMOS from flash image, correct the boot TFTP configuration entries, save the corrected configurations in `startup-config` or a remote DHCP config, then reload DXMOS. |
| | TFTP server unavailable or unreachable. | Either correct TFTP server availability or boot DXMOS from flash image. |
| | Incorrect configuration data (e.g., wrong IP address, wrong routes, etc.) | Verify that systems interposed between this system and the TFTP server are configured to forward packets. |
| Miniboot (embedded in gateware) or Boot fails | Corrupted gateware or Boot on startup flash chip. | Contact XKL technical support. |

**TABLE 8-3. Networking Troubleshooting Matrix**

| Symptom | Possible Cause | Possible Solution |
|---|---|---|
| Transceiver down | Fiber not connected. | Make sure fiber is connected. |
| | Dirty fiber. | Connect with clean fiber. |
| | Failed transceiver. | Replace failed component. DarkStar transceivers are hot-swappable. |
| Transceiver fails to initialize | • Slow initializing transceiver.<br>• Broken transceiver. | Issue a `clear module` command. If transceiver fails to reset, contact XKL technical support. |
| LOS (Loss of Signal) or LOL (Loss of Lock) on client or wave/trunk transceivers | Incorrect encapsulation type. | Verify encapsulation types at transmit and receive endpoints and ensure they are the same. |
| | Incorrect crossbar switch or stat mux switch configuration. | Check the connections made by the `connect` command or the `destination` command. |
| | External BERT is connected at different clock rate from system. | Synchronize BERT. |
| System reports erroneous transceiver interface power values | Excessive uncompensated dispersion in the link. | Compensate link dispersion. |
| Insufficient receive optical power / Insufficient transmit optical power / transceiver status flapping up/down | No transceiver transmission. | Run diagnostics and/or replace transceiver. |
| | Transceiver administratively disabled. | Verify optical receive power and transceiver interface state using a `show module` command. If necessary, execute `no laser shutdown` to enable the affected transceiver(s). |
| | Low optical power from customer equipment. | Investigate external customer equipment. |
| | Transceiver failure. | Replace transceiver. |

# 8.5 Recovery Mode

Recovery mode is a rare occurrence. You can manually enter recovery mode using the `recovery` keyword of the `boot` command. DXMOS enters recovery mode automatically at startup, if the `startup-config` file is detected to be unreadable, or contains corrupted data.

All telnet and SSH access to the system is disabled in recovery mode. Only the console can be used to attempt recovery without dropping customer traffic. In recovery mode, there is a limited set of commands to load a remote backup copy of the configuration. Typically, the configuration is stored as a local file in `/dxmos/config.dat`, but it may be acquired from remote sources by Boot during system startup.

The table lists commands available in recovery mode.

**TABLE 8-4. Recovery Mode Commands**

| Command | Description |
|---|---|
| **configure** | Enter configure mode to configure an Ethernet interface in advance of issuing a `configure network` command. |
| **configure network** *IPaddress FilePath* | Download a remote configuration backup when a management Ethernet interface is already configured. |
| **continue** | In cases where flash memory is unreadable or corrupt, and a backup configuration is unavailable, continue DXMOS startup without a configuration. |
| | *Continuing system startup without a configuration may cause loss of customer traffic, and will leave management interfaces unconfigured. Configuration settings must then be applied using manually-issued commands at the console.* |
| **drop-to-boot** | Revert to the system boot loader to access Boot facilities. |
| **ping/ping6** | Test IPv4/IPv6 connectivity. |
| **reload** | Reload all system software and gateware from flash memory. |
| **show** | Display information about the recovery mode system configurations. |

You can recover a DarkStar system from a configuration file stored on a remote server, but the system must be physically cabled to a live management network for this process to work. If the remote configuration file matches the running configuration, customer traffic on the DarkStar system will not be interrupted.

*XKL strongly encourages you to maintain current copies of your configuration using the `write memory` and `write network` commands whenever configuration changes are made.*

The following example shows system recovery using the `recovery` keyword of the `boot` command. Modify the example with installation-specific values to implement recovery.

Here, the operator defines an IP route to a TFTP server, verifies the routing table, and then uses the `configure network` command to retrieve a system configuration backup file (`config-backup.dat`). The system displays the file contents (not shown in this example) to allow the operator to confirm that this is the desired backup configuration file. (Note that there is a space before the "/recovery" keyword.)

```
Boot>boot file/dxmos/dxmos.exe/ recovery
[Loading ..............................................................]
[File entry-vector is at 7700,,1000, length is 5]
[PDVA at 7707,,0]
[Free pages from 35011 through 1777777]
[Disabling the watchdog timer for this program.]
[Setting "Recovery" flag.]
[Sending control flags to the program: o1000000200]
[Clearing program flags and context]
[ 1-Jan-2025 21:44:32 UT: Starting at 7700,,1000]
Starting DXM Operating System (DXMOS), XKL LLC
4.7.0-75bfb87cca93 Jan 01 2025  20:01:58 UTC
Copyright (c) 2004-2025 XKL LLC
All Rights Reserved

This product is protected by copyright and distributed under
licenses restricting copying, distribution and decompilation.

Initializing hardware...
System type: DQT400-4
System with CB400 transport companion board, p/n 30001-00112-00
Initializing CMD Loader
Initializing EPMonitor
Running startup-gateware
Power NOT Cycled
Mounting file system...
This system is product type 10002-11602-00, DQT400-4
Loading gateware RXIC from file /gateware/RXIC_01000-02820-00.bin

BADL data have been parsed.

Power Supply 0 is operating normally. (0xCC)
Power Supply 1 is operating normally. (0xCC)
Fan 0 present
Fan 1 present
Fan 2 present
The system has entered recovery mode either due to startup flash read failure,
or manual user operation.  To prevent dropping customer traffic, the software
did not modify the switch board configuration.  Use the configure network
command to recover the system configuration if you have a backup of it.
Please see the DarkStar User Guide for more details or contact XKL support.

recovery-mode# configure
recovery-mode CONF# management ethernet 0
recovery-mode CONF-MGMT-ETH[0]# ip address 123.123.2.27/16
recovery-mode CONF-MGMT-ETH[0]# exit
Interface Ethernet 0 address set to 123.123.2.27
Brought management interface 0 up
recovery-mode CONF# ip route 0/0 123.123.0.254
recovery-mode CONF# exit
```

```
recovery-mode# show ip routes

Codes:  C - Connected, S - Static, R - RIP

Current Route Table:
Org  Dest IP/CML         Cost  Source           NextHop          Status
Sending To
 C   123.123.0.0/16      0/0   123.123.2.27     123.123.2.27     Active
 S   0.0.0.0/0           1/1   0.0.0.0          123.123.0.254    Active
recovery-mode# configure network 123.123.1.99 backup.cfg

Determining file type...
Connecting...
File transferred successfully.
...Completing flash write.
;;;;;;;;
version 4.0.1
...[snipped contents of configuration file]...
The system will now proceed using this configuration.

Are you sure? [yes/NO] yes
localhost> ;;;;;;;;
localhost> version 4.0.1
...[snipped contents of configuration file]...
localhost>
```

# 8.6 Using the Debug Command

The `debug` command is an XKL diagnostic tool that displays detailed trace information about DarkStar system functions and network operations. In a production network, using `debug` can generate a high volume of trace information at the console and may degrade system performance, so XKL recommends the following:

- Use the `debug` command only when working with XKL technical support to diagnose a specific problem with your system.
- Avoid using `debug` in a production network. The system gives high priority to bug requests, so using `debug` may impact business applications.
- To monitor system operations, use the `show` commands, `logging` command, and SNMP traps to monitor system operations and events, rather than `debug`.

If a `debug` command is running, use the `undebug all` command (or `no debug all`) followed by a `<CR>` to instantly quiet all debugging output. You can type these commands at the console even if the console seems overwhelmed with debug trace messages and fails to echo your keystrokes.

# A

# Configuration File

## A.1 Default Configuration File

The following illustrates a configuration file for a DMD-A system with Line Protection. The default configuration file is created when you run `write memory` on a system that has not yet been configured.



*Many default configuration settings don't get written to a configuration file until that particular setting has been edited in the command line interface.*

```
# show startup-config
;;;;;;;;
version 4.0.1
enable
configure
line console
exit
line vty
exit
clock summer-time off
hostname localhost
management ethernet 0
description Eth
exit
management osc 0
no laser shutdown
description OSC
exit
management osc 1
no laser shutdown
description OSC
exit
amplifier input edfa
shutdown
control automatic channel-count 1
exit
amplifier output edfa
shutdown
control automatic channel-count 1
```

```
exit
! banner motd should be last in the configuration file for safety.
! A malformed MOTD with a missing ending delimiter will result in
! undefined behavior of any configuration statements after the MOTD.
```

## A.2 Configuration Examples

The following examples illustrate how you might configure various aspects of your system.

View the current configuration by running a `show running-config` command.

```
# show running-config
running-config:
;;;;;;;;
version 4.7.0
enable
configure
tacacs-server host limerick.xkl.com
line console
... ...
```

**Configure secure console access**

There are several services available for authorization, and you should carefully review the options when configuring secure access in your own environment. In some circumstances, incorrect security configuration may have the effect of locking an operator out of the system.

```
tacacs-server host yourhost
tacacs-server key supersecret
aaa authentication login default group tacacs+
line console
user someuser password apassword
line vty
password 5 somepassword
login
... ...
```

**Set system clock and host name**

```
clock timezone -8 0
clock summer-time usa
sntp server 1.1.1.1
hostname localhost
```

**Identify a DNS server**

```
ip domain-name some.domain.com
ip domain-name domain.com
ip name-server fd16:c32:da21:c01:209:5bff:fee1:5a7e
ip name-server 192.168.0.1
ip host flood fd16:c32:da21:c01:209:5bff:fee1:5a7e
ip host flood 192.168.0.1
```

#### Assign IP addresses for remote console access

This example assigns an IP address to Ethernet 0:

```
management ethernet 0
ip address 192.168.0.1/16
exit
```

#### Enable the OSC transceivers

By default, OSC interfaces are enabled.

```
management osc 0
no laser shutdown
exit
management osc 1
no laser shutdown
exit
```

#### Configure BERT logging ready for BER testing

```
bert log 1
```

#### Configure the client modules

Each client interface (0-9) is configured with an encapsulation to match its connected customer equipment.

```
module client 0
no laser shutdown
encapsulation 10gigabitethernet
... ...
... ...
module client 9
no laser shutdown
encapsulation 10gigabitethernet
```

#### Configure each wave module (0-9)

```
module wave 0
no laser shutdown
encapsulation 10gigabitethernet
... ...
... ...
module wave 9
no laser shutdown
encapsulation 10gigabitethernet
```

#### Configure EDFA amplification

```
amplifier input edfa
no shutdown
control manually-set power -5.0
... ...
... ...
```

**Define SNMP service host and traps**

```
snmp-server community public
snmp-server enable traps xkl
snmp-server enable traps xkl-generic
snmp-server host snmpservername
```

**Set the console log size**

```
logging mark 1
logging buffer 512
```

**Configure WSS attenuation and switch port connections**

```
wss input
port 0 name Seattle
band index 0 center-frequency 191600 bandwidth 100
attenuate set 0.0 band 0
connect port 0 band 0
... ...
... ...
```

**Configure OCM thresholds**

```
ocm demux
band index 0 center-frequency 191600 bandwidth 100
threshold low-alarm -40.0 band 0
... ...
... ...
```

## Sample Configuration 2

The following shows the configuration of a DQT100 system named "Demo-Issaquah," and paired with another DQT100 system in Seattle.

```
running-config:
;;;;;;;;
version 4.7.0
enable
configure
enable secret 5 fe01ce2a7fbac8fafaed7c982a04e229
user xkl password 5 95b5bce10ff3637ee34af3e6cbc106d7
user jdoe password 5 f88027cd33e37c783d009a356b7f0c1d
line console
exit
line vty
transport input ssh
login local
exit
clock summer-time off
hostname Demo-Issaquah
ip host seattle 172.16.1.1
ip host issaquah 172.16.1.5
management ethernet 0
ip address 172.16.1.5/24
exit
management ethernet 1
```

```
exit
management ethernet 2
exit
management ethernet 3
exit
management osc 0
no laser shutdown
exit
management osc 1
no laser shutdown
exit
module client 0/0
no laser shutdown
exit
module client 0/1
no laser shutdown
exit
module client 0/2
no laser shutdown
exit
module client 0/3
no laser shutdown
exit
module client 1/0
no laser shutdown
exit
module client 1/1
no laser shutdown
exit
module client 1/2
no laser shutdown
exit
module client 1/3
no laser shutdown
exit
module client 2/0
no laser shutdown
exit
module client 2/1
no laser shutdown
exit
module client 2/2
no laser shutdown
exit
module client 2/3
no laser shutdown
exit
module client 3/0
no laser shutdown
exit
module client 3/1
no laser shutdown
exit
module client 3/2
```

```
no laser shutdown
exit
module client 3/3
no laser shutdown
exit
module client 4/0
no laser shutdown
exit
module client 4/1
no laser shutdown
exit
module client 4/2
no laser shutdown
exit
module client 4/3
no laser shutdown
exit
module client 5/0
no laser shutdown
exit
module client 5/1
no laser shutdown
exit
module client 5/2
no laser shutdown
exit
module client 5/3
no laser shutdown
exit
module trunk 0
exit
module trunk 1
exit
switch
exit
ip route 0.0.0.0/0 172.16.1.254 1
! banner motd should be last in the configuration file for safety.
! A malformed MOTD with a missing ending delimiter will result in
! undefined behavior of any configuration statements after the MOTD.
```

# A.3 SpectraPath Provisioner Pair Configuration Example

Two SpectraPath Provisioners can be connected together to express channels in a ring network. The following example demonstrates the configuration process for pairs of SpectraPath Provisioners at different locations.

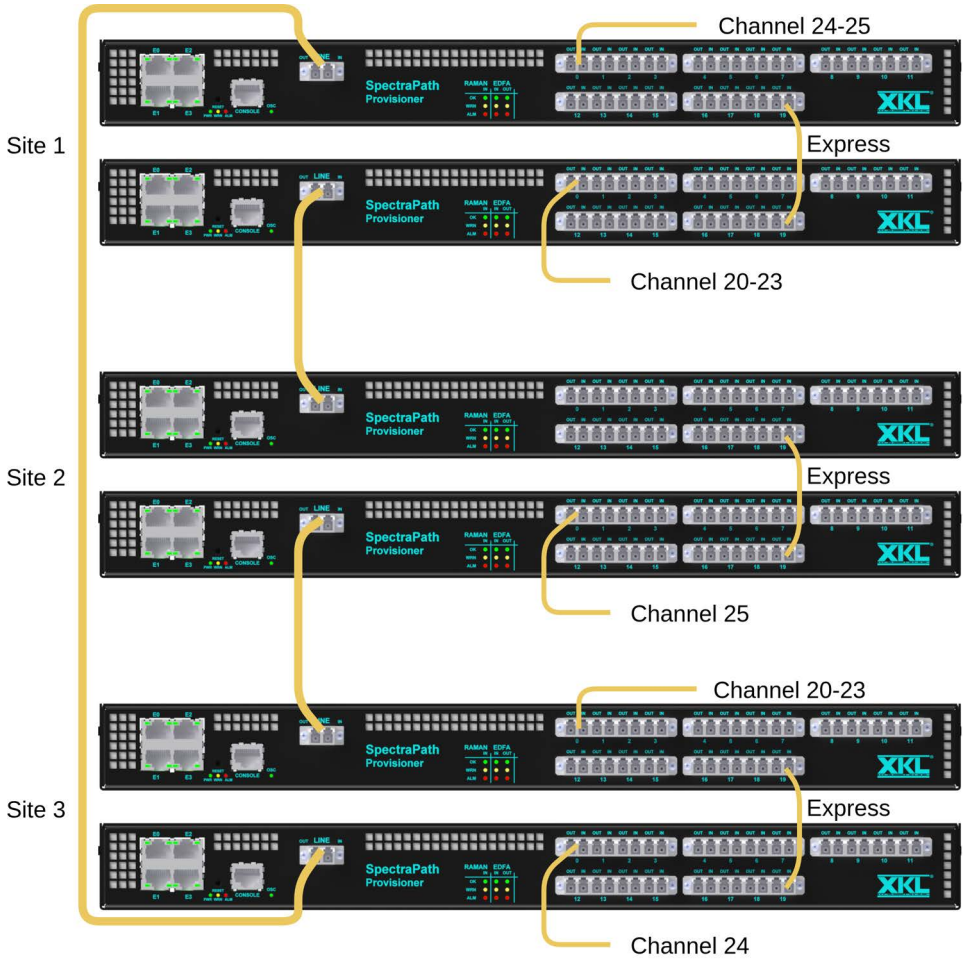

## DXMOS Configuration

All configuration of the system takes place at the input or output wss prompt:

```
localhost> enable
localhost# configure
localhost CONF# wss

Location of wave-selective switch to configure, one of the following:
 input
 output

localhost CONF# wss input
localhost CONF-WSS[input]#
```

## Configure the Provisioner systems at Site 1

Bands need to be created, attenuated, and connected to the correct switch ports for the channels that are being added/dropped to the top Provisioner system at this site. In this example, these are channels 24 and 25 at switch port 0:

```
SP-Provisioner_TOP_1 CONF-WSS[input]# band index 24 center-frequency 192400
bandwidth 100
SP-Provisioner_TOP_1 CONF-WSS[input]# band index 25 center-frequency 192500
bandwidth 100
SP-Provisioner_TOP_1 CONF-WSS[input]# attenuate set 0 band 24 25
SP-Provisioner_TOP_1 CONF-WSS[input]# connect port 0 band 24 25
SP-Provisioner_TOP_1 CONF-WSS[input]# exit
SP-Provisioner_TOP_1 CONF# wss output
SP-Provisioner_TOP_1 CONF-WSS[output]# band index 24 center-frequency 192400
bandwidth 100
SP-Provisioner_TOP_1 CONF-WSS[output]# band index 25 center-frequency 192500
bandwidth 100
SP-Provisioner_TOP_1 CONF-WSS[output]# attenuate set 0 band 24 25
SP-Provisioner_TOP_1 CONF-WSS[output]# connect port 0 band 24 25
```

No channels are being expressed between the top Provisioner and bottom Provisioner systems at Site 1. This completes the configuration for the top Provisioner system. The configuration for the bottom Provisioner system is similar, except that channels 20, 21, 22, and 23 are being added/dropped:

```
SP-Provisioner_BOTTOM_1 CONF-WSS[input]# band index 20 center-frequency 192000
bandwidth 100
SP-Provisioner_BOTTOM_1 CONF-WSS[input]# band index 21 center-frequency 192100
bandwidth 100
SP-Provisioner_BOTTOM_1 CONF-WSS[input]# band index 22 center-frequency 192100
bandwidth 100
SP-Provisioner_BOTTOM_1 CONF-WSS[input]# band index 23 center-frequency 192100
bandwidth 100
SP-Provisioner_BOTTOM_1 CONF-WSS[input]# attenuate set 0 band 20 23
SP-Provisioner_BOTTOM_1 CONF-WSS[input]# connect port 0 band 20 23
SP-Provisioner_BOTTOM_1 CONF-WSS[input]# exit
SP-Provisioner_BOTTOM_1 CONF# wss output
SP-Provisioner_BOTTOM_1 CONF-WSS[output]# band index 20 center-frequency
192000 bandwidth 100
SP-Provisioner_BOTTOM_1 CONF-WSS[output]# band index 21 center-frequency
192100 bandwidth 100
SP-Provisioner_BOTTOM_1 CONF-WSS[output]# band index 22 center-frequency
192100 bandwidth 100
SP-Provisioner_BOTTOM_1 CONF-WSS[output]# band index 23 center-frequency
192100 bandwidth 100
SP-Provisioner_BOTTOM_1 CONF-WSS[output]# attenuate set 0 band 20 23
SP-Provisioner_BOTTOM_1 CONF-WSS[output]# connect port 0 band 20 23
```

No channels are being expressed through the bottom Provisioner system at Site 1. This completes the configuration for the Provisioner systems at site 1.

## Configure the Provisioner systems at Site 2

The top Provisioner system at Site 2 is expressing channels 20,21,22, and 23. No channels are being added/dropped. Port 19 is used to express these channels to the bottom Provisioner system:

```
SP-Provisioner_TOP_2 CONF-WSS[input]# band index 20 center-frequency 192000
bandwidth 100
SP-Provisioner_TOP_2 CONF-WSS[input]# band index 21 center-frequency 192100
bandwidth 100
SP-Provisioner_TOP_2 CONF-WSS[input]# band index 22 center-frequency 192200
bandwidth 100
SP-Provisioner_TOP_2 CONF-WSS[input]# band index 23 center-frequency 192300
bandwidth 100
SP-Provisioner_TOP_2 CONF-WSS[input]# attenuate set 0 band 20 23
SP-Provisioner_TOP_2 CONF-WSS[input]# connect port 19 band 20 23
SP-Provisioner_TOP_2 CONF-WSS[input]# exit
SP-Provisioner_TOP_2 CONF# wss output
SP-Provisioner_TOP_2 CONF-WSS[output]# band index 20 center-frequency 192000
bandwidth 100
SP-Provisioner_TOP_2 CONF-WSS[output]# band index 21 center-frequency 192100
bandwidth 100
SP-Provisioner_TOP_2 CONF-WSS[output]# band index 22 center-frequency 192200
bandwidth 100
SP-Provisioner_TOP_2 CONF-WSS[output]# band index 23 center-frequency 192300
bandwidth 100
SP-Provisioner_TOP_2 CONF-WSS[output]# attenuate set 0 band 20 23
SP-Provisioner_TOP_2 CONF-WSS[output]# connect port 19 band 20 23
```

Now setup the bottom Provisioner system to also express traffic for channels 20,21,22, and 23. Additionally, channel 25 is being added/dropped at this system:

```
SP-Provisioner_BOTTOM_2 CONF-WSS[input]# band index 20 center-frequency 192000
bandwidth 100
SP-Provisioner_BOTTOM_2 CONF-WSS[input]# band index 21 center-frequency 192100
bandwidth 100
SP-Provisioner_BOTTOM_2 CONF-WSS[input]# band index 22 center-frequency 192200
bandwidth 100
SP-Provisioner_BOTTOM_2 CONF-WSS[input]# band index 23 center-frequency 192300
bandwidth 100
SP-Provisioner_BOTTOM_2 CONF-WSS[input]# attenuate set 0 band 20 23
SP-Provisioner_BOTTOM_2 CONF-WSS[input]# connect port 19 band 20 23
SP-Provisioner_BOTTOM_2 CONF-WSS[input]# band index 25 center-frequency 192500
bandwidth 100
```

```
SP-Provisioner_BOTTOM_2 CONF-WSS[input]# attenuate set 0 band 25
SP-Provisioner_BOTTOM_2 CONF-WSS[input]# connect port 0 band 25
SP-Provisioner_BOTTOM_2 CONF-WSS[input]# exit
SP-Provisioner_BOTTOM_2 CONF# wss output
SP-Provisioner_BOTTOM_2 CONF-WSS[output]# band index 20 center-frequency
192000 bandwidth 100
SP-Provisioner_BOTTOM_2 CONF-WSS[output]# band index 21 center-frequency
192100 bandwidth 100
SP-Provisioner_BOTTOM_2 CONF-WSS[output]# band index 22 center-frequency
192200 bandwidth 100
SP-Provisioner_BOTTOM_2 CONF-WSS[output]# band index 23 center-frequency
192300 bandwidth 100
SP-Provisioner_BOTTOM_2 CONF-WSS[output]# attenuate set 0 band 20 23
SP-Provisioner_BOTTOM_2 CONF-WSS[output]# connect port 19 band 20 23
SP-Provisioner_BOTTOM_2 CONF-WSS[output]# band index 25 center-frequency
192500 bandwidth 100
SP-Provisioner_BOTTOM_2 CONF-WSS[output]# attenuate set 0 band 25
SP-Provisioner_BOTTOM_2 CONF-WSS[output]# connect port 0 band 2
```

This completes the configuration for the Provisioner systems at site 2.

## Configure the Provisioner systems at Site 3

Finally, setup the Provisioner systems at Site 3. The top Provisioner system has channels 20, 21, 22, and 23 being added/dropped at this system. Additionally, channel 25 is being expressed through the top Provisioner to the bottom Provisioner:

```
SP-Provisioner_TOP_3 CONF-WSS[input]# band index 20 center-frequency 192000 bandwidth
100
SP-Provisioner_TOP_3 CONF-WSS[input]# band index 21 center-frequency 192100 bandwidth
100
SP-Provisioner_TOP_3 CONF-WSS[input]# band index 22 center-frequency 192100 bandwidth
100
SP-Provisioner_TOP_3 CONF-WSS[input]# band index 23 center-frequency 192100 bandwidth
100
SP-Provisioner_TOP_3 CONF-WSS[input]# attenuate set 0 band 20 23
SP-Provisioner_TOP_3 CONF-WSS[input]# connect port 0 band 20 23
SP-Provisioner_TOP_3 CONF-WSS[input]# band index 25 center-frequency 192500 bandwidth
100
SP-Provisioner_TOP_3 CONF-WSS[input]# attenuate set 0 band 25
SP-Provisioner_TOP_3 CONF-WSS[input]# connect port 19 band 25
SP-Provisioner_TOP_3 CONF-WSS[input]# exit
SP-Provisioner_TOP_3 CONF# wss output
SP-Provisioner_TOP_3 CONF-WSS[output]# band index 20 center-frequency 192000 bandwidth
100
SP-Provisioner_TOP_3 CONF-WSS[output]# band index 21 center-frequency 192100 bandwidth
100
SP-Provisioner_TOP_3 CONF-WSS[output]# band index 22 center-frequency 192100 bandwidth
```

```
100
SP-Provisioner_TOP_3 CONF-WSS[output]# band index 23 center-frequency 192100 bandwidth
100
SP-Provisioner_TOP_3 CONF-WSS[output]# attenuate set 0 band 20 23
SP-Provisioner_TOP_3 CONF-WSS[output]# connect port 0 band 20 23
SP-Provisioner_TOP_3 CONF-WSS[output]# band index 25 center-frequency 192500 bandwidth
100
SP-Provisioner_TOP_3 CONF-WSS[output]# attenuate set 0 band 25
SP-Provisioner_TOP_3 CONF-WSS[output]# connect port 19 band 25
```

Now setup the bottom Provisioner system to express channel 25. Additionally, channel 24 is being added/dropped at the system.

```
SP-Provisioner_BOTTOM_3 CONF-WSS[input]# band index 24 center-frequency 192400
bandwidth 100
SP-Provisioner_BOTTOM_3 CONF-WSS[input]# attenuate set 0 band 24
SP-Provisioner_BOTTOM_3 CONF-WSS[input]# connect port 0 band 24
SP-Provisioner_BOTTOM_3 CONF-WSS[input]# band index 25 center-frequency 192500
bandwidth 100
SP-Provisioner_BOTTOM_3 CONF-WSS[input]# attenuate set 0 band 25
SP-Provisioner_BOTTOM_3 CONF-WSS[input]# connect port 19 band 25
SP-Provisioner_BOTTOM_3 CONF-WSS[input]# exit
SP-Provisioner_BOTTOM_3 CONF# wss output
SP-Provisioner_BOTTOM_3 CONF-WSS[output]# band index 24 center-frequency 192400
bandwidth 100
SP-Provisioner_BOTTOM_3 CONF-WSS[output]# attenuate set 0 band 24
SP-Provisioner_BOTTOM_3 CONF-WSS[output]# connect port 0 band 24
SP-Provisioner_BOTTOM_3 CONF-WSS[output]# band index 25 center-frequency 192500
bandwidth 100
SP-Provisioner_BOTTOM_3 CONF-WSS[output]# attenuate set 0 band 25
SP-Provisioner_BOTTOM_3 CONF-WSS[output]# connect port 19 band 25
```

This completes the configuration of the Provisioner systems at site 3.

# B

# Optical Device Specifications

## B.1 Recommended Transceiver Sensitivity Levels

The DarkStar system optical settings are configured at the factory to meet customer requirements. If there is a possibility that the system has been installed, perhaps temporarily, with relatively short fiber connections—for example, a few tens of meters—then it is good practice to verify that the transceiver signal power still falls within the recommended sensitivity range for that transceiver. If necessary, attenuate the incoming signal.

You can determine recommended transceiver power levels using the `show modules` sub-commands, and attenuate an incoming signal by inserting a simple filter in the incoming fiber connector.

```
localhost# show modules client 0 media-side

                        Client 0 Media-Side Receiver
...

Rx Power
 Lane 0: ..............................................     2.8 dBm
 Lane 1: ..............................................     3.4 dBm
 Lane 2: ..............................................     2.9 dBm
 Lane 3: ..............................................     2.9 dBm

 High Alarm: ..........................................     6.9 dBm (False)
 High Warning: ........................................     4.9 dBm (False)
 Low Warning: .........................................    -6.9 dBm (False)
 Low Alarm: ...........................................    -9.9 dBm (False)
...

localhost# show modules wave 0 media-side

                         Wave 0 Media-Side Receiver
...

Rx Power
 Lane 0: ..............................................   -12.1 dBm

 High Alarm: ..........................................     1.9 dBm (False)
 High Warning: ........................................     0.0 dBm (False)
```

```
 Low Warning: ......................................   -23.0 dBm (False)
 Low Alarm: .......................................   -28.2 dBm (False)
...

localhost#
```

# B.2 Amplifier Specifications

Factory default amplifier settings will depend on the configuration of your DarkStar system, primarily the number of channels. Consequently, there are many possible configurations for a DMD-A. Table B-1 provides an example of the calculations used to determine amplifier power for one such DMD-A configuration.

Table B-2 provides the calculations for determining amplifier power for DLA systems, and will differ based upon the amplifier configuration used.

**Important:** DXMOS provides a command that will perform these calculations, namely `amplifier control automatic channel-count` *n*.

**TABLE B-1. Determining Amplifier Power for DMD-A Systems**

| DMD-A EDFA | Output Power Calculation |
|---|---|
| Output (Booster) | EDFA Output Power (dBm) = Target Signal Power Per Channel (dBm) + 10 x $\log_{10}$ (Total No. of Channels) + OSC Filter Insertion Loss (dB) + No. of Optical Protection Switch x 50/50 Splitter Insertion Loss (dB)<br>**Step 1:** Read the Input Power reported by the EDFA, and find the Signal Gain needed to achieve the target output power: (EDFA Output Power) - (Input Power).<br>**Step 2:** If the Signal Gain is 17.0 to 29.0 dB, then Set Mode = AGC with Gain = Signal Gain.<br>**Step 3:** If the Signal Gain is below 17.0 or above 29.0 dB, then set Mode = APC with Power = (EDFA Output Power). |
| Input (Preamp) | EDFA Output Power (dBm) = Optimum Received Power Per Channel (dBm) + Filter Insertion Loss (dB) + DCM Insertion Loss (dB) + 10 x $\log_{10}$ (Total No. of Channels) |

**TABLE B-2. Line Amplifier Output Power Calculation**

| DLA EDFA | Output Power Calculation |
|---|---|
| Output (Booster) | Mode = Gain Control<br>Gain = 22dB |
| Input (Preamp) | Mode = Power Control<br>Output Power involves a two-step calculation. The "Target Output EDFA Optical Power" of Step 1 is used in Step 2 for determining "Target Input EDFA Output Power."<br>**Step 1:** Target Output EDFA Optical Power (dBm) = Max Signal Power Per Channel (dBm) + 10 x $\log_{10}$ (Total No. of Channels) + OSC Filter Insertion Loss (dB)<br>**Step 2:** Target Input EDFA Output Power (dBm) = Target Output EDFA Optical Power (dBm) - Output EDFA Optimum Gain (dB) + DCM Insertion Loss (dB) + Tilt Filter Insertion Loss (dB) + Equalizer Filter Insertion Loss (dB) |

**TABLE B-3. Determining Amplifier Power for DUA Systems**

| DUA EDFA | Output Power Calculation |
|---|---|
| Output (Booster) | EDFA Output Power (dBm) = Target Signal Power Per Channel (dBm) + 10 x $\log_{10}$ (Total No. of Optical Channels) + OSC Filter Insertion Loss (dB) |
| Input (Preamp) | EDFA Output Power (dBm) = Target Signal Power Per Channel (dBm) + 10 x $\log_{10}$ (Total No. of Optical Channels) + Tilt Filter Insertion Loss (dB) + OSC Filter Insertion Loss (dB) |

**TABLE B-4. Individual Amplifier Output Power Calculation**

| DMD-A EDFA | Output Power Calculation |
|---|---|
| Output (Booster) | EDFA Output Power (dBm) = Target Signal Power Per Channel (dBm) + 10 x $\log_{10}$ (Total No. of Channels) + OSC Filter Insertion Loss (dB) + No. of Optical Protection Switch x 50/50 Splitter Insertion Loss (dB) |
| Input (Preamp) | EDFA Output Power (dBm) = Optimum Received Power Per Channel (dBm) + Filter Insertion Loss (dB) + No. of DCM x + DCM Insertion Loss (dB) + 10 x $\log_{10}$ (Total No. of Channels) |

DarkStar systems may have an EDFA. The following Table B-5 and Table B-6 list the specifications.

**TABLE B-5. Minimum Required Total Input Power (dBm) by DarkStar Model**

| Model | Minimum Input Power (dBm)* |
|---|---|
| DSM10-10 | -20 |
| DQM10 12-channel | -19 |
| DQM10 24-channel | -16 |
| DQM10 36-channel | -14 |
| DMD-A | Network dependent, maximum 96 channels. |
| *Input Optical Power measurements are for DarkStar systems operating at optimized link dispersion with a single pre-amplifier. These values ensure that the system will operate according to the datasheet in regards to OSNR, dispersion tolerance, and receive optical power. | |

**TABLE B-6. EDFA Optical Specifications**

| Parameter | Min | Typical | Max |
|---|---|---|---|
| Minimum Wavelength Range (nm) | 1528 | | 1563 |
| Total Operating Input Power (dBm) | -35 | | 0 |
| Total Operating Output Power (dBm) | | | |
| +20dBm EDFA Module (dBm) | -10 | | +20 |
| +23dBm EDFA Module (dBm) | -10 | | +23 |
| Optimal Designed Flat Gain (dB) | | 22 | |
| Gain Setting Accuracy (dB) | -0.25 | | 0.25 |
| Variable Gain Range (dB) | 17 | | 29 |
| Noise Figure, including connector loss at Optimal Gain, Maximum Output Power (dB) | | 5.5 | |
| Gain Flatness over the Operation Wavelength | | | ±0.75 |
| Polarization Dependence Gain (dB) | | 0.3 | 0.5 |
| Polarization Mode Dispersion (ps) | | | 0.3 |
| Dynamic Gain Tilt (dB) | | | 0.9 |

**TABLE B-7. Raman Optical Specifications**

| Parameter | Min | Typical | Max |
|---|---|---|---|
| Minimum Wavelength Range (nm) | 1528 | | 1566 |
| Total Operating Input Power (dBm) | -44 | | -5 |
| Total Operating Output Power (mW) | | | 600 |
| Gain (dB) | | 12 | |
| Gain Flatness over the Operation Wavelength | | | 1.2 |
| Polarization Dependence Gain (dB) | | 0.3 | |
| Polarization Mode Dispersion (ps) | | 0.6 | |
| Signal Insertion Loss (dB) | | 1.2 | 1.8 |
| Noise Figure, including connector loss at Optimal Gain, Maximum Output Power (dB) | | 0.0 | |

# B.3 DGE-OCM Specifications

Factory default DGE-OCM setting is disabled with no defined waveplan. Table B-8 summarizes the DGE-OCM optical specifications. Note, the maximum Band attenuation value states 25.5 dB; however, setting the attenuation greater than 15 dB may not result in a greater attenuation value.

**TABLE B-8. DGE-OCM Optical Specifications**

| Parameter | Min | Max |
|---|---|---|
| Waveplan frequency range (GHz) | 191325 | 196175 |
| Band index | 0 | 255 |
| Bandwidth (GHz) | 6.25 | 4850 |
| Band attenuation (dB) | 0 | 25.5 |
| Band attenuation error (dB) | 0.7 | 10% of Band Attenuation |
| OCM Rx power, one band (dBm) | -40 | -10 |
| OCM Rx power error (dBm) | +- 0.7 from -24 - -10 dBm | +- 1.0 when <-24 dBm |
| DGE Optical power, one band (dBm) | | 12.5 |
| DGE Optical power, all bands (dBm) | | 27 |
| DGE insertion loss (dBm) | 4.9 | 5.2 |

# B.4 WSS & OCM Specifications

FFactory default WSS & OCM settings are disabled with no defined waveplans. Table B-9 summarizes the optical specifications for both the WSS and OCM optical devices.

**TABLE B-9. WSS & OCM Optical Specifications**

| Parameter | Min | Max |
|---|---|---|
| Waveplan frequency range (GHz) | 191400 | 196100 |
| Band index | 0 | 511 |
| Bandwidth (GHz) | 25.0 | 4700 |
| Band attenuation (dB) | 0 | 15.0 |
| Band attenuation error (dB) | -1.0 | +1.0 |
| OCM Rx power, one band (dBm) | -40 | 0 |
| OCM Rx power error (dBm) | -1.0 | +1.0 |
| WSS Optical power, one band (dBm) | | 24 |
| WSS Optical power, all bands (dBm) | | 27 |
| WSS Common Port insertion loss (dBm) | 3.0 | 8.0 |
| WSS Alternate Port insertion loss (dBm) | | 9.0 |

# C

# Example of a DarkStar Optical Pathway

## C.1 DSM10-10 System

As incoming optical signals pass through a DarkStar system, they are converted to electrical signals, and then back again. For example, Figure C-1 illustrates the path of a signal through a DSM10-10 system.

A DarkStar client transceiver converts incoming traffic from optical to electrical signals, improving signal quality and enabling an electrical crossbar to switch the signal to a line transceiver. A Mux filter aggregates the optical signals of all the line transceivers onto a single fiber.

EDFAs are pre-configured at the factory, and at bring-up time, the user can re-configure amplifier power and gain settings so that the received power at each line transceiver is at the optimal operating condition.

**FIGURE C-1. Optical and Electrical Signal Pathways Through a DSM10-10 System**

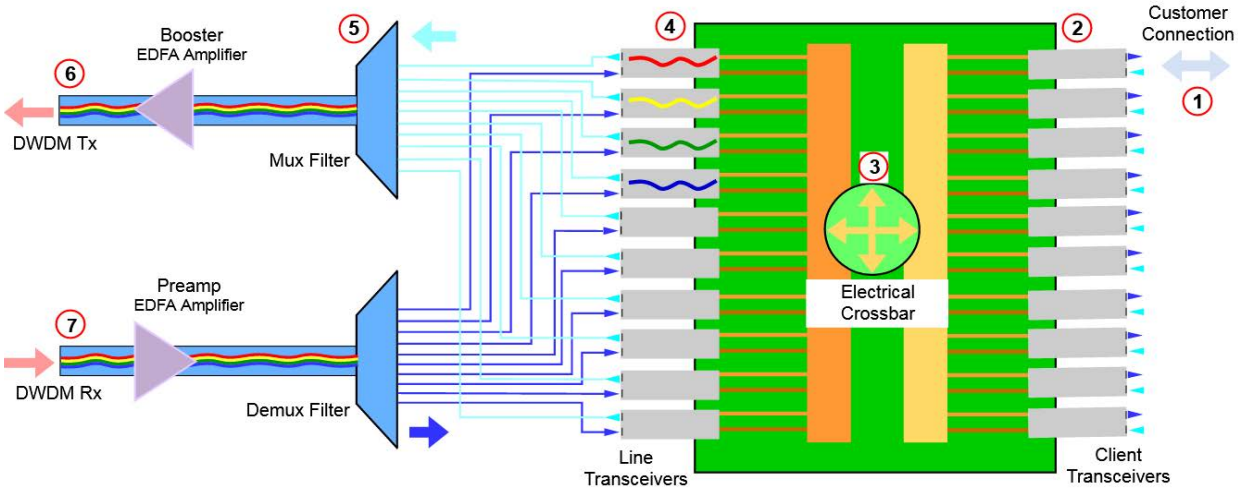


As illustrated in Figure C-1, the transmission of a signal from customer equipment involves the following pathway:

1. A client transceiver receives a customer signal via the client optical port on the front panel of the DarkStar system. The user defines the encapsulation at the command line interface (CLI).
2. The client transceiver converts the customer optical signal to an electrical signal for connection via the electrical crossbar.
3. The electrical crossbar receives the customer signal and connects it to an internal line transceiver.

**Note:** The user configures the connection between the client and line transceivers. As part of wave protection functionality, the electrical crossbar can be configured so that traffic will switch automatically to a fail-over channel if the connection to the line transceiver is interrupted, and optionally can fall back again when the connection is restored. The fail-over channel can be changed during system operation at any time.

4. A line transceiver receives the electrical signal and converts it to an optical DWDM signal having its own unique wavelength.
5. A Mux filter aggregates the individual line transceiver wavelengths (or "waves") onto a single fiber. At this point, all of the customer equipment inputs have been merged to a single transmission. Also aggregated onto the same fiber is the output from the DarkStar OSC transceiver (not shown).
6. The front panel's line/band port connects the fiber trunk between a pair of DarkStar systems.
7. To receive a transmitted signal, the optical pathway at the receiving DarkStar works in reverse.

# D

# DarkStar Point-to-Point Management Network Using OSCs

## D.1 Point-to-Point Network Example

An example of a point-to-point network of DarkStar systems using OSCs. This network allows for connections to DarkStar systems DS1 and DS2 from customer systems Terminal A or Terminal B.

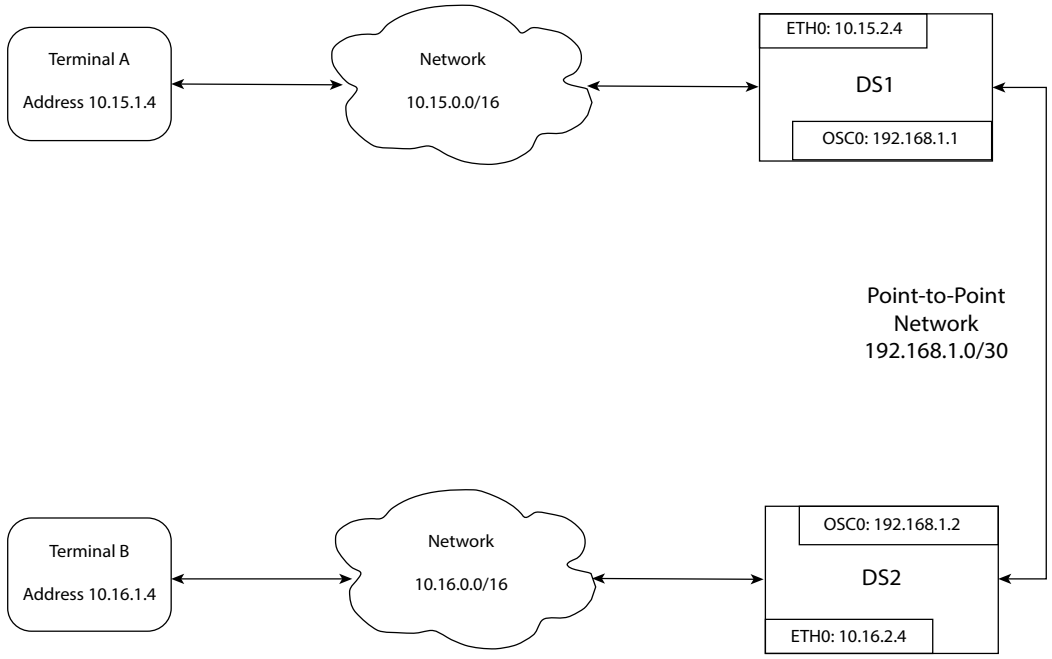

### D.1.1 DS1 Configuration

- Define ETH0 address 10.15.2.4/16
- Define OSC0 address 192.168.1.1/30
- Define static route to network 10.16.0.0/16 via 192.168.1.2

```
ds1> enable
ds1# configure
ds1 CONF# management eth 0
ds1 CONF-MGMT-ETH[0]# ip addr 10.15.2.4/16
ds1 CONF-MGMT-ETH[0]# exit
Interface ETH 0 address set to 10.15.2.4
Brought management interface 0 up
ds1 CONF# management osc 0
ds1 CONF-MGMT-OSC[0]# ip addr 192.168.1.1/30
ds1 CONF-MGMT-OSC[0]# exit
Interface OSC 0 address set to 192.168.1.1
Brought management interface 4 up
ds1 CONF#
ds1 CONF# ip route 10.16.0.0/16 192.168.1.2
ds1 CONF# exit
ds1#
```

### D.1.2 DS2 Configuration

- Define ETH0 address 10.16.2.4/16
- Define OSC0 address 192.168.1.2/30
- Define static route to network 10.15.0.0/16 via 192.168.1.1

```
ds2> enable
ds2# configure
ds2 CONF# management eth 0
ds2 CONF-MGMT-ETH[0]# ip addr 10.16.2.4/16
ds2 CONF-MGMT-ETH[0]# exit
Interface ETH 0 address set to 10.16.2.4
Brought management interface 0 up
ds2 CONF# management osc 0
ds2 CONF-MGMT-OSC[0]# ip addr 192.168.1.2/30
ds2 CONF-MGMT-OSC[0]# exit
Interface OSC 0 address set to 192.168.1.2
Brought management interface 4 up
ds2 CONF#
ds2 CONF# ip route 10.15.0.0/16 192.168.1.1
ds2 CONF# exit
ds2#
```

### D.1.3 Terminal A

- Define network interface address 10.15.1.4 on network 10.15.0.0/16
- Define static route to network 192.168.1.0/30 via 10.15.2.4

### D.1.4 Terminal B

- Define network interface address 10.16.1.4 on network 10.16.0.0/16
- Define static route to network 192.168.1.0/30 via 10.16.2.4

# E

# Available Protocols

## E.1 Associated Data Rates and Encapsulations

Table E-1 gives examples of supported DarkStar system protocols, and the associated data rates and encapsulations.

**TABLE E-1. Available Protocols, Data Rates and Corresponding Encapsulation**

| Protocol | Gb/s | DSM10-10 | DQM10 DQT10 | DQM100 DQT100 | DAT100 | DQM400 DQT400 | DFM400 DFX400 | Encapsulation |
|---|---|---|---|---|---|---|---|---|
| 1X Gigabit Ethernet | 1.25 | X | X | | | | | `gigabitethernet` |
| 10GBase-T | 10 | | | | | | | |
| 10GBase-W (WAN PHY) | 9.95 | X | X | | | | | `sonet oc192` |
| 10GBase-R (LAN PHY) | 10.31 | X | X | X | X | | | `10gigabitethernet` |
| 10GBase-T (FEC 255/237) | 11.09 | X | X | | | | | `10gigabitethernet fec` |
| 100GE (100Gb/s) | | | | | X | X | X | `CAUI-4` |
| 400GE (100 Gb/s up to 400 Gb/s) | | | | | | X | X | `4x100GAUI-2` |
| 400GE (400 Gb/s) | | | | | | X | X | `400GAUI-8` |
| | | | | | | | | |
| 1X Fibre Channel | 1.06 | X^ | X^ | | | | | `fibrechannel 1g` |
| 2X Fibre Channel | 2.13 | X^ | X^ | | | | | `fibrechannel 2g` |
| 4X Fibre Channel | 4.25 | X^ | X^ | | | | | `fibrechannel 4g` |
| 8X Fibre Channel | 8.5 | X^ | X^ | | | | | `fibrechannel 8g` |
| 10X Fibre Channel | 10.52 | X | X | | | | | `fibrechannel 10g` |
| | | | | | | | | |
| OC-48/STS-48, STM-16 | 2.49 | X | X | | | | | `sonet oc48` |
| OC-192/STS-192, STM-64 | 9.95 | X | X | | | | | `sonet oc192` |
| OC-192/STS-192, STM-64 (FEC 255/238) | 10.66 | X | X | | | | | `sonet oc192 fec` |
| OC-192/STS-192, STM-64 (FEC 255/237) | 10.71 | X | X | | | | | `sonet oc192 fec` |
| ^ limited testing | | | | | | | | |

### E.1.1 Displaying Encapsulation Types

The following example illustrates how to display the available encapsulation types on a client interface:

```
localhost> enable

localhost# configure

localhost CONF# module client 0

localhost CONF-MOD-CLIENT[0/*]# encapsulation ?

 One of the following:
 1x100GAUI-2
 2x100GAUI-2
 3x100GAUI-2
 400GAUI-8
 400GAUI-8_ZR
 4x100GAUI-2
 4x100GAUI-2_ZR

localhost CONF-MOD-CLIENT[0/*]# encapsulation
```

# F

# Glossary

## F.1 Terms

**AAA – Authentication, Authorization, and Accounting**
A set of commands used to configure who has access to what and set up how server use is logged.

**ADM – add-drop multiplexer**
A network device that can combine signals or separate out particular wavelengths. For example, a multiplexer can add one or more lower bandwidth signals to an existing high bandwidth data stream and simultaneously extract other low bandwidth signals and redirect them to another network path.

**AGC – Automatic Gain Control**
An amplifier mode that maintains a constant signal gain. A change in the input power leads to a corresponding change in the output power. Gain is calculated with the following equation: Signal Gain = Signal Output Power - Input Power.

**APC – Automatic Power Control**
An amplifier mode that maintains a constant signal output power despite a change in the number of optical channels.

**administratively down**
When the user has disabled the interface.

**active optical device**
An optical component that requires external power to operate. Active devices include transceivers and amplifiers.

**APP - Automatic Path Protection**
A set of commands to provide redundancy for a wave connection by transmitting the same signal over two different physical fiber connections. Applies to DSM10-5R systems only.

**ARP – Address Resolution Protocol**
To communicate, a system needs both an IP (network) address and a MAC (media access control, or hardware) address. When only the IP address is known, ARP sends a message asking for the equivalent MAC address.

**attenuation**
When a light signal travels through fiber, optical power is reduced (i.e., attenuated), as the light scatters or is absorbed in the fiber. The main factor of attenuation is the distance traveled, but there is also attenuation every time the signal passes through a splice, splitter, connector, or any other component. Not all active components result in attenuation; however, all passive components do. DarkStar products include both passive and active components. Passive components in DarkStar systems that introduce attenuation include connectors, splitters/couplers, filters, and dispersion compensation modules (DCM).

**BERT (bit error ratio test)**
A testing method that measures the bit error ratio, which is a percentage that indicates the reliability of a digital transmission. There are several ways to run a bit error ratio test, but all involve sending a test pattern to a receiver that expects and verifies that the same pattern was received. DarkStar DXMOS includes commands to set up, run, and configure a BERT.

**boot**
To instantiate an operating environment. The operating environment may be instantiated with identical software/firmware/gateware components as were previously running, or with updated components. See the DarkStar Command Reference for more information on booting, rebooting, and reloading DarkStar systems. *See also* reboot.

**Boot**
A required program in DarkStar systems that initializes the control processor and boots DXMOS.

**C-band**
The "conventional" band is the range of optical wavelengths from 1530-1565 nm used by most DWDM systems. Amplifiers work well in the C-band, and fiber cable is most efficient in this range.

**channel**
A communications path, or the signal that is transmitted through a medium. Multiplexing combines several channels for data communications.

**CIDR – classless inter-domain routing**
A flexible method of allocating and routing IP addresses that conserves available IP space. A CIDR address has two parts: one specifies the network, the other specifies the host within that network.

**Class 1M**
DarkStar systems use Class 1M lasers. The IEC and AINSI have defined classes of laser safety, with respective recommended safety protocols. The IEC defines Class 1M as "Not known to cause eye or skin damage unless collecting optics are used." Though Class 1M is generally safe, never look directly into any laser beam, regardless of its classification.

**CLI – command line interface**
A text-based interface for interacting with a computer system. DarkStar users configure the system and obtain information about the system using the CLI. The DarkStar system provides the CLI to a console through a serial connection or to a networked terminal through a Virtual Terminal (VTY).

**client**
The local connection in (and out) of a system. These ports are used to connect the DarkStar system to local customer equipment such as switches, routers, and other network services.
*See also* client transceiver, trunk, and wave.

**client port**
Another name for client.

**client transceiver**
An optical transceiver connected to a client port on the front panel of a DarkStar transponder or muxponder system. Client transceivers are connected to customer equipment with multi-mode (MM) fiber and use 850nm wavelength(s); with single-mode (SM) fiber, they use 1310nm wavelength(s). *See also* client and line transceiver.

**crossbar switch**
A switch with a matrix of connections between inputs and outputs. Original switches had physical metal bars that were the input and output paths, and crosspoints were where an input and output connection crossed. Today, if the switch has M inputs and N outputs, its matrix contains M × N crosspoints, or places where the bars cross. The crossbar switch is a feature of the DSM10 series, DQM10 series and DQT10 series, and enables a specific client to be connected to any other client or wave, and vice versa.

**CTY – console terminal**
A serial terminal port that is provided by a DarkStar system and is used to access the command line interface (CLI).

**CWDM – coarse wavelength division multiplexing**
Similar to DWDM, coarse wavelength division multiplexing combines several wavelengths into a single signal. There are typically eight combined wavelengths, as opposed to potentially 80 available with DWDM. CWDM requires less power and less expensive transceivers, but cannot transmit over the longer distances available with DWDM. Optical data transport in DarkStar systems use DWDM.

**dB – decibel**
As light travels a distance, or through any kind of splice, connection, component, etc., it loses optical power (attenuation). This loss is measured using the unit-less dB. Attenuation dB is a logarithmic scale, and the equation for dB is 10 base log the ratio of input intensity/output intensity. There are some standard estimates that are useful for planning a system, e.g., assume a 0.5 dB loss for each splice. dB is also used to express the amount of amplification.

**dBm – decibel-milliwatts**
Used to express optical power, dBm is an abbreviation for the power ratio in decibels (dB) of the measured power referenced to one milliwatt (mW).

**DCM – dispersion compensation module**
Passive, Fiber Bragg Grating (FBG) based filters that provide the necessary dispersion compensation for any customer fiber type, and are typically required for transmission systems using direct-detect transceivers.

**DGE-OCM – dynamic gain equalizer and optical channel monitor**
A software controlled per-channel optical attenuator with optical power measurement, allowing measurement and adjustment / equalization of optical power across channels.

**dispersion**
The spreading of a light signal as it passes through a fiber cable (though not all light signals spread). Dispersion can have several causes. Modal dispersion is related to the angle at which a wavelength enters the fiber. Because several wavelengths can be sent simultaneously, not all of the wavelengths will have the same entry angle. If it enters at a shallow angle, it will travel faster. If it enters the fiber at a higher angle, it is reflected off the core boundary many times, slowing it down. Chromatic dispersion is when the wavelengths spread out from each other, due to their differing rates of propagation. By the time the signal is received, it is wider than when it was sent.

**DMUX – demultiplexer**
A device that separates two or more signals previously combined by multiplexing equipment. *See also* MUX – multiplexer.

**DWDM – dense wavelength division multiplexing**
A process where different optical wavelengths are combined into one optical signal. This is a way to combine many signals from different sources and transmit them on one fiber, all at the same time. In the C band, 40 channels of 100GHz channel spacing or 96 channels of 50GHz channel spacing is a common DWDM solution. *See also* WDM – wavelength division multiplexing

### EDFA – erbium doped fiber amplifier
A device that amplifies an optical signal by sending it through a fiber that has been doped with trivalent erbium ions. The erbium ions are excited by a separate laser that pumps it with energy to stimulate the erbium. As the signal interacts with the stimulated erbium, it emits photons at the same wavelength as the original signal, amplifying it.

### flash memory
The file system that retains data for the long term (as opposed to "main memory" where data is obliterated on reboot or reload).

### Fast Ethernet
A standard that offers speeds of 100Mbps over Cat-3 or UTP. It preserves many of the attributes of Ethernet, including frame format, MAC mechanisms, and MTU. Also called 100BASE-T.

### Fibre Channel
A technology for transmitting high-speed data between computer devices (over optical fiber or copper). Fibre Channel was developed by a committee and has become popular in data storage networks. It is optimized for connecting servers to shared storage devices and connecting storage controllers and drives.

### FTP - File Transfer Protocol
A protocol for transferring files over a computer network. An FTP session is typically carried by a TCP/IP connection. FTP is commonly used to transfer files within a local area network and over the internet.

### GigE – Gigabit Ethernet
A backbone of LAN technology offering data speeds up to 1000Mbps, or one gig per second. GigE can use either a shared or switched medium.

### hot-swappable
The ability to add or remove a component from a system without first removing the power to the system. Some components in DarkStar systems are hot-swappable.

### ICMP – Internet Control Message Protocol
A protocol that is used to send error and diagnostic messages to hosts on an IP network. These messages are used to monitor and diagnose problems on an IP network. Ping and traceroute use ICMP functionality.

### insertion loss
The attenuation, expressed in dB, that results from inserting a component into a fiber link. A component is any added item that interrupts the fiber, such as a connector, splice, coupler, or filter. The loss is the reciprocal of the ratio of signal strength after the inserted component and the signal strength before the inserted component. *See also* dB – decibel.

### LAN – local area network
A high-speed, low-error data network covering a relatively small geographic area. Ethernet, FDDI, and Token Ring are widely used LAN technologies.

### layer 1 protection
*See also* OPP - Optical Path Protection.

### LOL – loss of lock
An event that occurs when an interface cannot lock to the data rate of a signal. DarkStar systems may have Clock and Data Recovery (CDR) circuitry. If equipped, and the CDR circuitry fails to lock on a signal, the DarkStar system may report LOL against the transceiver or interface. LOL can occur in the receive or transmit direction.

### line
The multiplexed trunk/wave DWDM and optical service channel (OSC) signal. A line is comprised of two fiber strands: one strand for the transmit direction, the other for the receive direction. *See also* line transceiver, trunk, and wave.

**line transceiver**
The internal transceiver (typically using DWDM optics) of a muxponder or transponder system that generates a unique optical wavelength (i.e., "wave"). Line transceivers generally have a greater reach than client transceivers. *See also* client transceiver, trunk, and wave.

**LOS – loss of signal**
The receive optical power of a DarkStar transceiver asserts an LOS when the incoming signal power falls below a threshold. Thresholds are not configurable and are transceiver specific. LOS can be caused by many different things, including a bad connection, bad cable, or a malfunctioning transmitter.

**Loss of Sync**
Loss of Sync, or Loss of Synchronization, refers to the receiver being unable to maintain synchronization with the incoming data stream.

**management switch**
The internal Ethernet switch acting as a Layer-2 switch that is used to manage the DarkStar system via the four front-panel Ethernet ports (E0–E3).

**MD5 hash**
A digital "fingerprint" produced from a string of text by the Message-Digest algorithm 5 (MD5). Such hashes are commonly used for cryptographic purposes. DarkStar systems use MD5 to encrypt plaintext passwords before storing them.

**MIB – Management Information Base**
A database that describes the objects in a network. The MIB is hierarchal, and contains information about managing and monitoring each object. The MIB describes each object using five mandatory characteristics, and sometimes contains additional optional information. This information is used by the Simple Network Management Protocol (SNMP).

**multimode (MM) fiber**
An optical fiber that supports transverse guided modes for a given optical frequency and polarization. The number of guided modes is determined by the wavelength and the refractive index profile of the fiber. The core is larger than singlemode, so each mode has a different reflection angle. In multimode fiber, signals tend to disperse over longer distances, so it is best for shorter applications. A multimode fiber core is either 50µ or 62µ in diameter. *See also* single-mode (SM) fiber.

**MUX – multiplexer**
A device that combines multiple signals into a single signal. DarkStar systems can be combined to multiplex up to 40 signals into a single output. *See also* DMUX – demultiplexer.

**muxponder system**
A system that aggregates wavelengths (i.e., a Wavelength Division Multiplex or WDM system). A muxponder is simply a transponder with added optical mux/demux filters (such as the DarkStar DSM10, DQM10, DQM100, DQM400, and DFM400 products). We can also say that a muxponder is a system that combines multiple data-rate signals into a single, higher data-rate signal.
*See also* transponder system.

**nm - nanometer**
Unit to express optical wavelength, a nanometer is one billionth of a meter (0.000000001 m). DarkStar systems transmit DWDM signals in the "conventional" C-band of 1530-1565 nm.

**network topology**
The map of a network that describes the pattern of links connecting pairs of nodes. A node has one or more links to other links. The simplest topology is a point-to-point link between two devices. Common network topologies are bus, ring, and star layouts.

### OA – Optical Amplifier
A device that amplifies an input optical signal without converting it to electrical form. Two common types of optical amplifiers are Raman and EDFA.

### OADM – optical add-drop multiplexer
A passive optical network device that can combine signals or separate out particular wavelengths. This is used to add and drop wavelengths into and out of an optical signal without converting them back to electrical form. For example, a multiplexer can extract one or more signals of a particular wavelength from the incoming fiber and simultaneously insert different signals (of the same wavelengths) in the outgoing fiber. The extracted signals can be redirected to another network path if they are sent through an Optical Protection Switch (OPS). *See also* ADM – add-drop multiplexer and OMD – optical mux/demux.

### OC – Optical Carrier
A series of standardized transmission bandwidth for signals that can be carried on SONET optical networks. There are eight categories, such as OC-1, OC-3, OC-12, and OC48. The suffix is a multiple of 51.84 Mbps, so OC-1=51.48 Mbps, OC-3 = 155Mbps, and so on. *See also* SONET – Synchronous Optical Network.

### OCM – Optical Channel Monitor
A device that monitors optical signal power.

### OMD – optical mux/demux
A filter that multiplexes (combines) multiple signals into one fiber and demultiplexes (splits) multiple signals into multiple distinct signals. Unlike an OADM, the OMD does not allow any signals to pass. *See also* OADM – optical add-drop multiplexer.

### OPP - Optical Path Protection
Another term for line protection. See the definition for Line Protection for more detail.

### optical protection
Depending on the product, this layer 1 protection can be accomplished as follows:

- Line Protection: This scheme leverages an Optical Protection Switch (OPS). This solution is typically the most cost effective, but cannot support all types of customer topologies. The scheme protects against fiber breaks, and is typically used for point-to-point topologies.
- Wave Protection: This scheme leverages standby line transceivers (i.e., DWDM), thus allowing protection from a line transceiver failure or a fiber break. This approach is flexible in that it supports any topology.
- Trunk Protection: This scheme leverages the statistical multiplexing feature. The customer can set up protection on a per-client basis. The aggregation of multiple clients to a single trunk can be configured such that if the trunk fails, or the fiber connected to the trunk has a break, then any or all of the clients can be reassigned to another trunk automatically.

### OPS – optical protection switch
A mechanical optical-protection switch that enables the line protection feature, consisting of a primary port and backup port.

### Optical receiver
An opto-electric circuit that detects incoming lightwave signals and converts them to the appropriate electronic signals for processing by a receiving device. Components of a receiver include a light-detecting device (photodiode), an amplifier, and connections to other devices. A receiver is often combined with a transmitter to create a transceiver.

### OSC – optical service channel
Management channel between DarkStar systems. The OSC is an out-of-band signal.

### OSC transceiver
The transceiver that implements the Optical Service Channel (OSC).

### OSNR – optical signal-to-noise ratio
Used to quantify the degree of optical noise interference on optical signals. The optical signal-to-noise ratio (OSNR) is the ratio of signal power to noise power in an optical channel.

### OTDR – optical time domain reflectometer
An instrument used in design and diagnostics that locates faults or infers attenuation in optical networks. It works by sending a series of signals into a fiber, then measuring the strength of the backscatter, or amount of light that is reflected back. From this, the OTDR can calculate the attenuation in a fiber, and locate a bad splice, break, bend, or other disruption in the fiber cable.

### passive optical device
A component that does not require external power to manipulate or react to optical output. Passive devices include optical mux/demux modules, splitters, attenuators, and connectors.

### power cycle
When electrical power is removed from a DarkStar system and then re-applied.

### PRBS – pseudo random bit sequence
Used in  testing, a pseudorandom binary sequence (PRBS) is a sequence of bits (1 and 0), produced with a deterministic algorithm. Consequently, PRBS is statistically close to a random sequence. PRBS is used in  testing to determine the reliability of digital communication systems. Most DarkStar systems can generate a PRBS signal to test a link. From a mathematical perspective, PRBS is a polynomial sequence designed for a specific number of bits. For example:
PRBS7 = x^{7} + x^{6} + 1
PRBS15 = x^{15} + x^{14} + 1
PRBS23 = x^{23} + x^{18} + 1
PRBS31 = x^{31} + x^{28} + 1
*See also* BERT (bit error ratio test).

### protection interface
The secondary interface in a wave protection system. The protection interface takes over if the signal on the working interface is interrupted.

### QSFP - quad small form-factor pluggable
A type of optical transceiver. The transceiver is compact and contains four lanes of up to 10Gbps. These transceivers can be removed from the system without powering down.

### Raman amplifier
An optical amplifier that uses Stimulated Raman Scattering (SRS). Unlike EDFA devices, the signal is amplified using a nonlinear interaction between the signal and a pump laser within an optical fiber. Both types of Raman amplifiers (distributed and lumped) use fiber as the gain medium: a distributed amplifier uses the transmission fiber as the gain medium by multiplexing a pump wavelength with signal wavelength, and requires a minimum span of 100km; a lumped Raman amplifier uses a dedicated, shorter length of fiber to provide amplification. Raman amplifiers can be inserted into an existing system to upgrade it, can be tailored to work in different regions of the spectrum, and produces a stronger signal with less noise.

### reboot
A reboot replaces DXMOS. The replacement DXMOS is expected to leave the data plane traffic undisturbed, provided the startup configuration matches the former running configuration. *See also* boot.

### RIP – Routing Information Protocol
An interior gateway protocol that helps routers dynamically adapt to changes of network connections by describing which network each router can reach and how far away those networks are.

**running-config**
The running configuration refers to the current configuration state of the system while it is up and running. It differs from the startup configuration due to configure commands given subsequent to system startup. Using the `write memory` command will save any configuration changes to the startup-config (startup configuration) file.

**SFP – small form-factor pluggable transceiver**
An optical transceiver that is compact and hot-swappable. Rather than having to open up a system and replace boards, the SFP can be pulled out and replaced without powering down the system. There are SFPs for different applications, such as 1310 or 1550 nm, single-mode or multi-mode, SFSW, and SFP+.

**single-mode (SM) fiber**
A small-core optical fiber through which only one mode can propagate. Since dispersion is nonexistent, SM fibers are good for longer distances and have a higher bandwidth, making them popular in CATV networks, and larger LANs such as universities and colleges.

**SNMP – Simple Network Management Protocol**
An application layer protocol for exchanging management information between network devices. SNMP allows network administrators to monitor performance, troubleshoot problems, and plan for growth.

**SONET – Synchronous Optical Network**
An ANSI transport protocol for fiber-optic transmission systems, originally developed to transport voice and data over the same lines. The protocol allows many different data streams from many different sources to be quickly transmitted at the same time over optical fiber. A major benefit of SONET is that it allows for a ring topology with a working ring and a secondary, backup ring. When there is a failure in the working ring, SONET automatically detects it and transfers the workload to the secondary ring, and this is called "self-healing." SONET was initially developed by the telecommunication industry and has since been adopted worldwide - it's now an ANSI standard in the U.S., and SDH is the international equivalent.

**startup-config**
The startup configuration file (i.e., /dxmos/config.dat) that reflects the configuration settings of the system after it reloads, reboots, or powers up.

**static routes**
Manually-defined paths between devices in an IP network. Static routes use less processing power and bandwidth than dynamic routing. However, since any status changes must be entered manually, static routing is not appropriate for managing larger networks.

**switch**
*See also* crossbar switch, management switch and OPS – optical protection switch.

**TCP/IP – Transmission Control Protocol/Internet Protocol**
The basic language of the Internet, "TCP/IP" refers to the two layers of communication. TCP manages the packets of data that make up a message, IP manages computer addresses and directs messages to the correct destination.

**TFTP – Trivial File Transfer Protocol**
A simple protocol for transferring files, TFTP can only read and write. Because it does not have any authentication capability, TFTP is most commonly used to copy and read files within a local area network.

**Temperature**

The case temperature of the transceiver, as reported by the transceiver. The value is read from the module temperature sensor.
**Display format:** +/- nn C

**topology**
*See also* network topology.

**transceiver**
See client transceiver, line transceiver, and OSC transceiver.

**transport interface**
Any kind of transmitting/receiving medium that carries data.

**transponder system**
A system that takes optical signals at one wavelength and converts them into optical signals at another wavelength. The optical signals are full duplex, as are the associated electrical signals. A transponder may convert the optical signals to electrical signals in the process. For some DarkStar systems, a crossbar ASIC or an aggregation FPGA allows routing of electrical signals. *See also* muxponder system.

**trunk**
DarkStar systems provide one or more "trunks" or "trunk ports." Trunk ports carry the optical signals originating from the line transceivers in a DarkStar transponder system. When the signal originates from a DarkStar muxponder, the trunk carries a DWDM signal. When the signal originates from a DarkStar transponder, each trunk carries a single channel, not a DWDM signal. *See also* wave and line transceiver.

**tunable transceiver**
A transceiver that can be adjusted to transmit a selected wavelength. When used in DWDM, tunable transceivers can provide more efficient optical wavelength allocation. Even though they are more expensive, they are economical for spares, since they can be tuned to replace several varieties of fixed-wavelength transceiver.

**VTY – virtual terminal**
The interface that allows network managers to log on to a DarkStar system from a remote computer/terminal using an IP network.

**watchdog timeout**
An event that causes the processor to reload its gateware and DXMOS to restart. This is akin to the reload command. Customer data will not be affected, provided the running-config has been saved.

**wave**
A wave can have multiple meanings: 1) An optical carrier of data. 2) The line transceiver generating this optical carrier, and also called a "wave transceiver," "wave port" or "wave interface." 3) The line counterpart of a particular client. For example, in some DarkStar products, a wave is associated with a client by creating a connection. *See also* trunk and line transceiver.

**warm reload**
A reload of the controller firmware and software. The customer data is unaffected by a warm reload. The state of client and wave interfaces, as well as the crossbar switch and stat mux switch, remain unchanged. The data plane is unaffected by warm reload (provided that the startup-config matches the former running-config).

**WDM – wavelength division multiplexing**
A process where optical signals with different wavelengths are combined, transmitted together, and separated again. This is a way to combine up to 8 signals from different sources and transmit them on one fiber, all at the same time. DWDM is similar but with higher wavelength density. *See also* DWDM – dense wavelength division multiplexing.

**working interface**
The primary interface in a wave protection system. If the signal on the working interface is interrupted, the protection (secondary) interface takes over. Not all DarkStar systems offer wave protection.

**WSS - Wavelength Selective Switch**
A device that dynamically routes and attenuates optical signals between a line port and a switch port.



## Support

24 Hour Customer Support
U.S. Toll Free (866) 949-8340
Outside U.S. +1 (608) 807-0033
support@xkl.com

## Sales

U.S. Toll Free (866) 802-2777
Outside U.S. +1 (425) 497-6590
customersolutions@xkl.com

XKL, LLC
11601 Willows Road NE, Suite 101
Redmond, WA 98052

xkl.com/support/